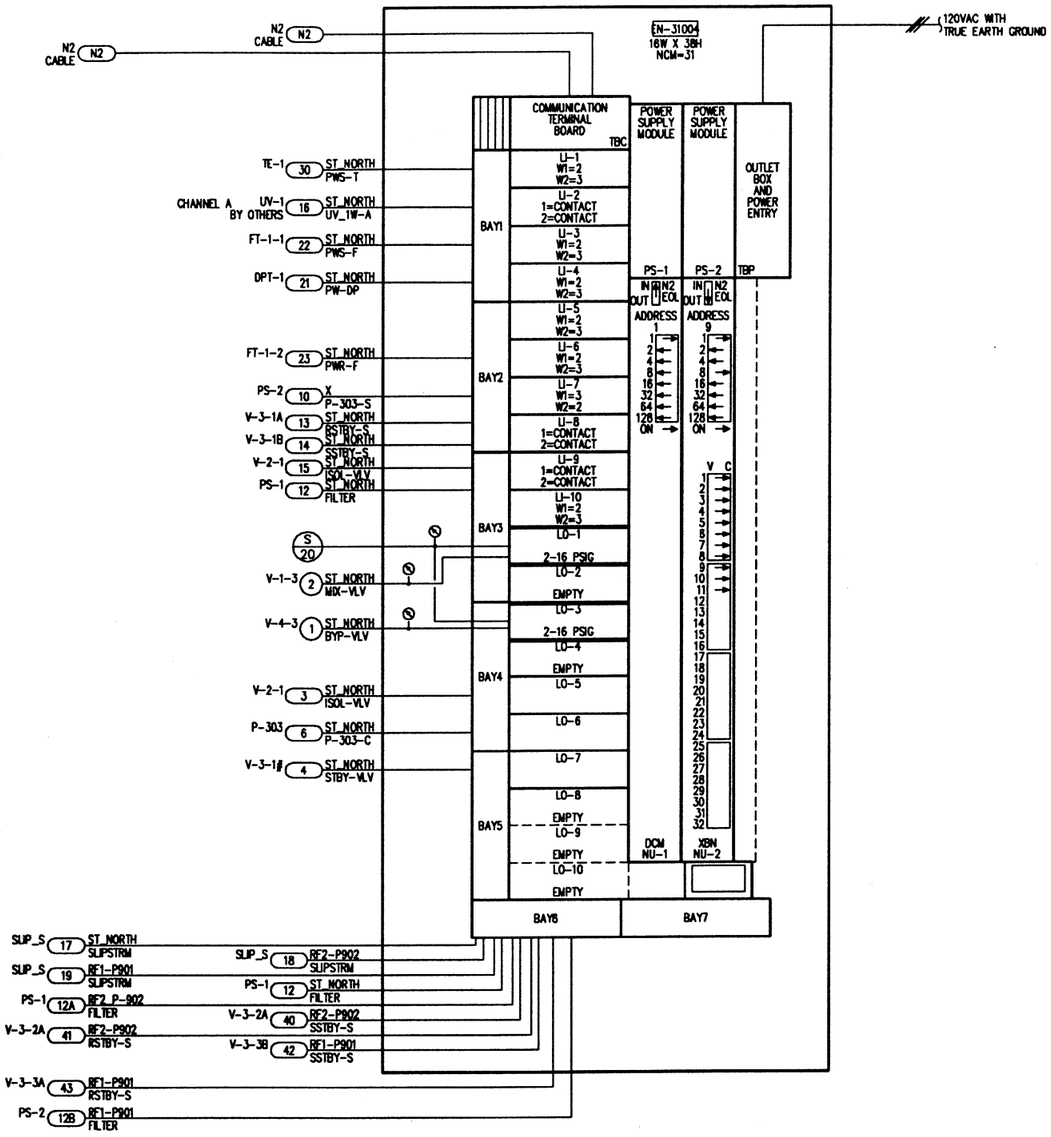

PANEL MATERIAL

DEVICE TAG	QTY	CODE NUMBER	DESCRIPTION
EN-31004	1	EN-BSF201-0	2 SLOT BASE FRAME
	1	EN-EWC200-0	NCU/NEU 16X30 ENCLOSURE
LI-1, LI-3-LI-7, LI-10	7	FM-IUN101-0	
LI-2, LI-8-LI-9	3	FM-IBN101-0	2 BINARY INPUT FM
LO-1,LO-3	2	FM-OAP121-0	E/P OUTPUT FM F/DCM 1SLOT
LO-2,LO-4, LO-8-LO-10	5	FM-KIT127-0	FM BLANKOFFS
LO-5-LO-7	3	FM-ORL101-0	LATCH RELAY OUTPUT FM
NU-1	1	NU-DCH140-0	DIGITAL CONTROL MODULE
NU-2	1	NU-XBN101-0	XM 32 BIN INPUT
PS-1-PS-2	3	NU-PWR101-0	POWER SUPPLY

Enclosure, EN-31004, NEU Serving Building 420
Process Water(RF/EXT-West)

COPYRIGHT JOHNSON CONTROLS, INC.1993

FILE: EN-31004

DRAWING TITLE
Enclosure, EN-31004
Network Expansion Unit, NEU
Serving RF/EXT-West

REFERENCE DRAWING	NO.	REVISION-LOCATION	ECN	DATE	BY

SALES ENGR	PROJECT MGR	APPL. ENGR	DRAWN	APPROVED
JP	SF	DCS	BY SF DATE 10/19/94	BY DATE

PROJECT
The Argonne National Labs
Advanced Photon Source Campus
9700 Cass Avenue South
Argonne, IL 60439

JOHNSON CONTROLS
Systems & Services Division

3007 MALMO ROAD
ARLINGTON HEIGHTS
ILLINOIS 60005
708/364-1500 Main
708/808-4438 Eng

CONTRACT NUMBER 91390-0009

DRAWING NUMBER 91-9-D-~~XXX~~

02F