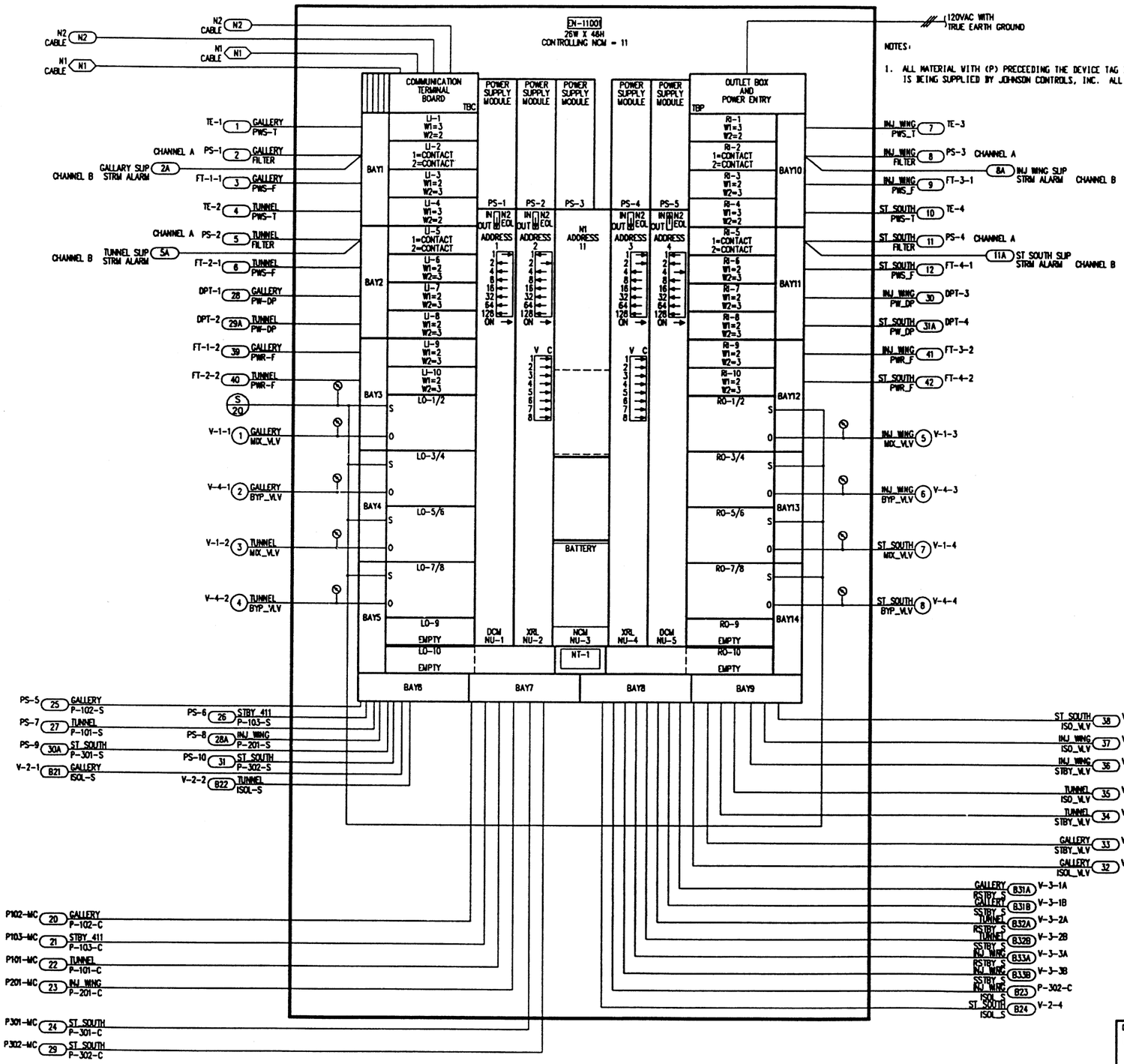

NOTES:

1. ALL MATERIAL WITH (P) PRECEDING THE DEVICE TAG IN THE BILL OF MATERIAL IS PROPRIETARY AND IS BEING SUPPLIED BY JOHNSON CONTROLS, INC. ALL OTHER MATERIAL IS NON-PROPRIETARY.

PANEL MATERIAL

	DEVICE TAG	QTY	CODE NUMBER	DESCRIPTION
(P)	EN-11001	1	EN-BSF501-0	5 SLOT BASE FRAME
		1	EN-EVC500-0	NCU/NEU 26X46 ENCLOSURE
		1	EN-KEY101-0	MASTER KEYS
(P)	LI-1, LI-3-LI-4, LI-6-LI-10, RI-1, RI-3-RI-4, RI-6-RI-10	16	FM-IUN101-0	UNIVERSAL INPUT FM
(P)	LI-2,LI-5, RI-2,RI-5	4	FM-IBN101-0	2 BINARY INPUT FM
(P)	LO-1/2,	8	FM-OAP101-0	E/P OUT FM FOR DCM
	LO-3/4, LO-5/6, LO-7/8, RO-1/2, RO-3/4, RO-5/6, RO-7/8	8	FM-OAP102-0	DAP MANUAL MODULE
	LO-9,10 RO-9-RO-10	4	FM-KIT127-0	FM BLANKOFFS
(P)				
(P)				
(P)	NT-1	1	ID-NTU102-0	NETWORK TERMINAL W/LIGHT
		1	EM-KIT103-0	NT CRADLE KIT
(P)	NU-1,NU-5	2	NU-DCM101-0	DIGITAL CONTROL MODULE
(P)	NU-2,NU-4	2	NU-XRL101-0	XM-8/OUT LATCH 8/INP
(P)	NU-3	1	NU-NCM200-0	NETWORK CONTROL MODULE
(P)	PS-1-PS-5	5	NU-PWR101-0	POWER SUPPLY
	ACC	9	G-2010-5	GAUGE

POINT OBJECT DEFINITION

Hardware Dev	Hardware Sys\Obj Name	Dnld Type	Actl Type	Slot Type	Slot Nmbr	Sub Slt	Software Sys\Obj Name	S/V Type	Point Type
1	NC11_HW\DCM1	DCM	101						
				Input	1		GALLERY\PVS-T	AI	
				Input	2	1	GALLERY\FILTER	BI	MBI
				Input	3		GALLERY\PWS-F	AI	
				Input	4		TUNNEL\PWS-T	AI	
				Input	5	1	TUNNEL\FILTER	BI	MBI
				Input	6		TUNNEL\PWS-F	AI	
				Input	7		GALLERY\PV-DP	AI	
				Input	8		TUNNEL\PV-DP	AI	
				Input	9		GALLERY\PWR-F	AI	
				Input	10		TUNNEL\PWR-F	AI	
				Input	2	2	GALLERY\SLIPSTRM	BI	MBI
				Input	5	2	TUNNEL\SLIPSTRM	BI	MBI
				Output	1		GALLERY\MIX-VLV	AOD	PROP
				Output	3		GALLERY\BYP-VLV	AOD	PROP
				Output	5		TUNNEL\MIX-VLV	AOD	PROP
				Output	7		TUNNEL\BYP-VLV	AOD	PROP
2	NC11_HW\XRL1	XRL	XRL						
				Input	1		GALLERY\P-102-S	BI	SINGLE
				Input	2		STBY_411\P-103-S	BI	SINGLE
				Input	3		TUNNEL\P-101-S	BI	SINGLE
				Input	4		INJ_WING\P-201-S	BI	SINGLE
				Input	5		ST_SOUTH\P-301-S	BI	SINGLE
				Input	6		ST_SOUTH\P-302-S	BI	SINGLE
				Input	7		GALLERY\ISOL-S	BI	SINGLE
				Input	8		TUNNEL\ISOL-S	BI	SINGLE
				Output	1		GALLERY\P-102-C	BO	
				Output	2		STBY_411\P-103-C	BO	
				Output	3		TUNNEL\P-101-C	BO	
				Output	4		INJ_WING\P-201-C	BO	
				Output	5		ST_SOUTH\P-301-C	BO	
				Output	6		ST_SOUTH\P-302-C	BO	
4	NC11_HW\XRL2	XRL	XRL						
				Input	1		GALLERY\RSTBY-S	BI	SINGLE
				Input	2		GALLERY\SSTBY-S	BI	SINGLE
				Input	3		TUNNEL\RSTBY-S	BI	SINGLE
				Input	4		TUNNEL\SSTBY-S	BI	SINGLE
				Input	5		INJ_WING\RSTBY-S	BI	SINGLE
				Input	6		INJ_WING\SSTBY-S	BI	SINGLE
				Input	7		INJ_WING\ISOL-S	BI	SINGLE
				Input	8		ST_SOUTH\ISOL-S	BI	SINGLE
				Output	1		GALLERY\ISOL-VLV	BO	
				Output	2		GALLERY\STBY-VLV	BO	
				Output	3		TUNNEL\STBY-VLV	BO	
				Output	4		TUNNEL\ISOL-VLV	BO	
				Output	5		INJ_WING\STBY-VLV	BO	
				Output	6		INJ_WING\ISOL-VLV	BO	
				Output	7		ST_SOUTH\ISOL-VLV	BO	
5	NC11_HW\DCM2	DCM	101						
				Input	1		INJ_WING\PVS-T	AI	
				Input	2	1	INJ_WING\FILTER	BI	MBI
				Input	3		INJ_WING\PWS-F	AI	
				Input	4		ST_SOUTH\PWS-T	AI	
				Input	5	1	ST_SOUTH\FILTER	BI	MBI
				Input	6		ST_SOUTH\PWS-F	AI	
				Input	7		INJ_WING\PV-DP	AI	
				Input	8		ST_SOUTH\PV-DP	AI	
				Input	9		INJ_WING\PWR-F	AI	
				Input	10		ST_SOUTH\PWR-F	AI	
				Input	2	2	INJ_WING\SLIPSTRM	BI	MBI
				Input	5	2	ST_SOUTH\SLIPSTRM	BI	MBI
				Output	2		INJ_WING\MIX-VLV	AOD	PROP
				Output	4		INJ_WING\BYP-VLV	AOD	PROP
				Output	6		ST_SOUTH\MIX-VLV	AOD	PROP
				Output	8		ST_SOUTH\BYP-VLV	AOD	PROP

FILE:
DCODE:

REFERENCE DRAWING	NO.	REVISION-LOCATION	ECN	DATE	BY
		RECORD		05/11/94	SF
	3	ADD SLIP STRM		06/10/93	SF
	2	CHNG N1 ADDRESS		11/11/92	SF

SALES ENGR	PROJECT MGR	APPL. ENGR	DRAWN BY	DATE	APPROVED BY	DATE
JP	SF	DCS	SF	02/02/92		

DRAWING TITLE
ENCLOSURE, EN-11001

PROJECT
The Argonne National Labs
Advanced Photon Source Campus
9700 Cass Avenue South
Argonne, IL 60439

JOHNSON CONTROLS
Systems & Services Division
3007 MALMO ROAD
ARLINGTON HEIGHTS
ILLINOIS 60005
708/364-1500 Main
708/806-4438 Eng

CONTRACT NUMBER 91390-0009

DRAWING NUMBER 91-9-B-02B

Enclosure, EN-11001, NCU Serving Buidling
411 Process Water

COPYRIGHT JOHNSON CONTROLS, INC.1993