Flow Diagram and Equipment Locations for Building Heating Water Bridge, LTW-701

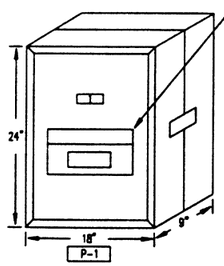

Nametag Schedule

Item	Device Tag	Nametag Description
1	P-1	ARGONNE NATIONAL LABS BUILDING 410 HTG WATER LTW-701

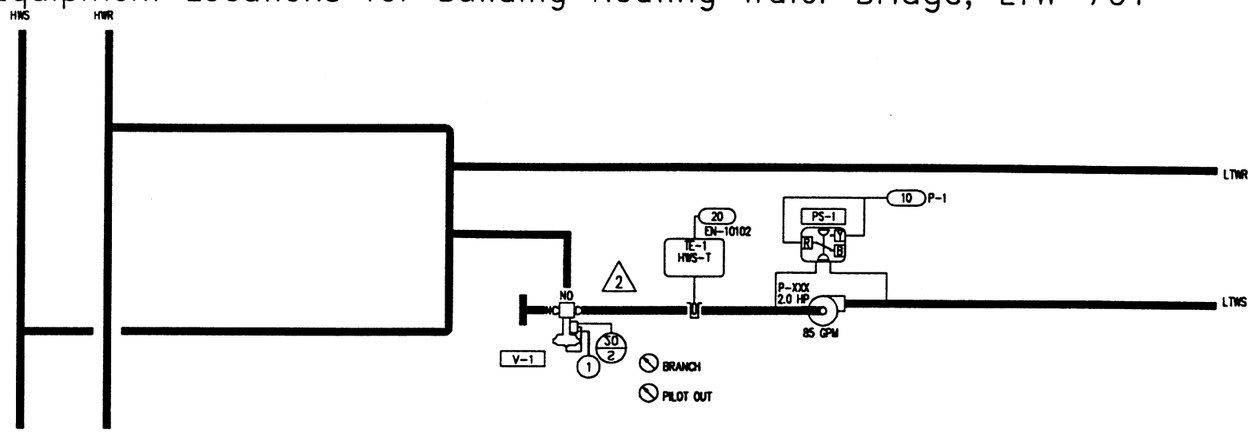

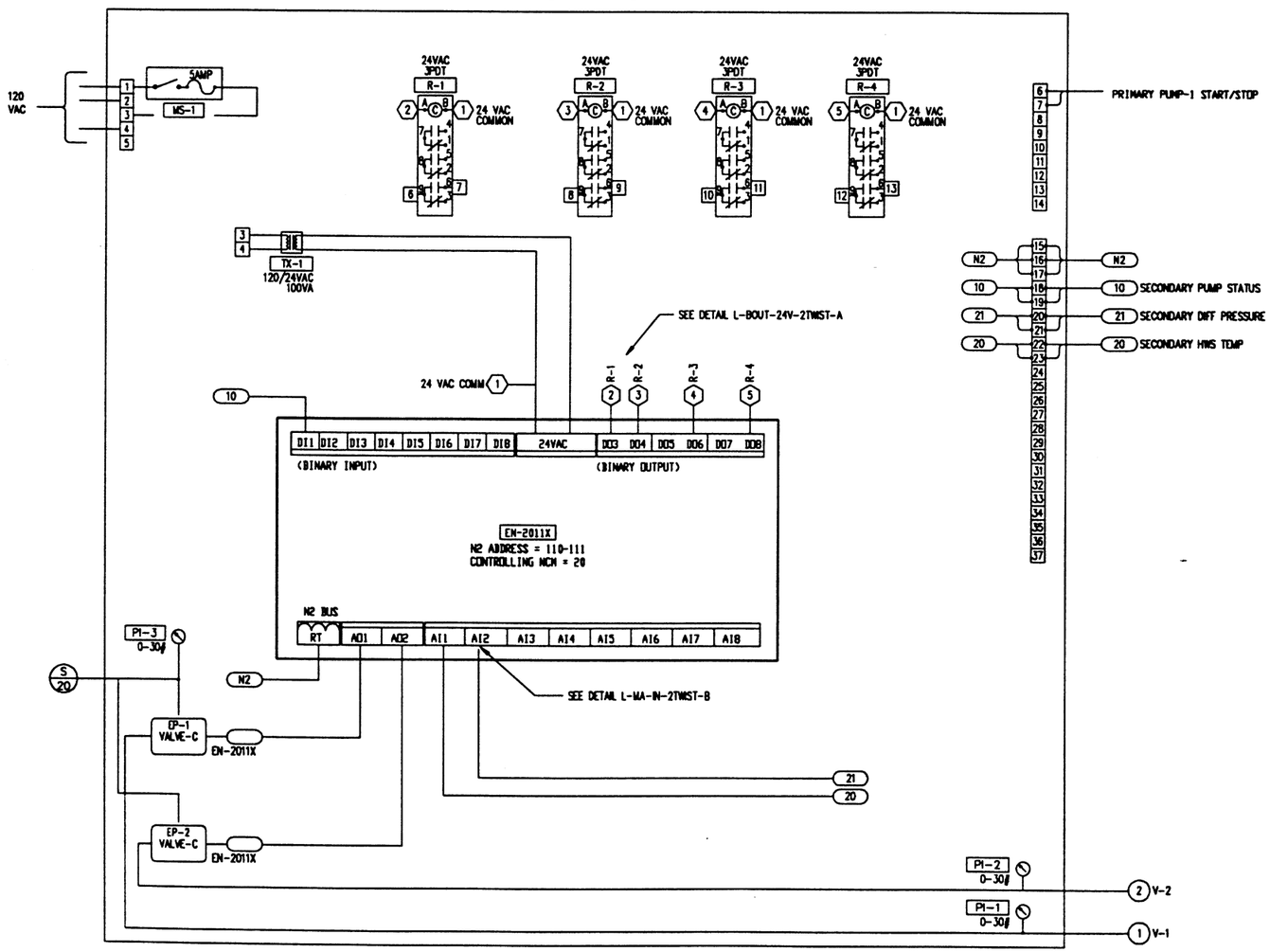

FIELD MATERIAL

DEVICE TAG	QTY	CODE NUMBER	DESCRIPTION
PS-1	1	P74FA-5C	DIFFERENTIAL PRES CONTROL
TE-1	1	TE-6000-4	SENSOR, 1000 OHM +/- .25%
	1	TE-6001-3	PACKING NUT & FTG.S
	1	WZ-1000-2	STAINLESS STEEL WELL,1/2"
V-1	1	----	SEE VALVE SCHEDULE

PANEL MATERIAL

DEVICE TAG	QTY	CODE NUMBER	DESCRIPTION
(P) ACC	1	M-8000-393	SCREW-ON LAMCOID NAME-
(P) ACC	32	PD-113-15	TERM SEC MINIATURE 600V
(P) ACC	5	PD-113-3	TERMINAL BLOCK; MEDIUM
(P) MS-1	1	PD-112-22	BUSS SSU FUSE HOLDER/
	1	PD-112-23	FUSE T-5 (5AMP) FOR
(P) P-1	1	M-8100-1824	CONTROL CABINET;STD. FACE
(P) PI-1-PI-7	5	G-2010-5	AIR GAGE 1-1/2"
(P) PI-3-PI-4			
(P) R-1-R-4	4	PD-109-21	RELAY; PLUG IN 3PDT
	4	PD-101-35	SOCKET; 11PIN BLADE
(P) TX-1	1	Y64AL-2C	TRANSFORMER
(P) DC-1	1	LCP200-0	DIGITAL CONTROLLER
(P) EP-1-EP-2	2	EP-8000-4	ELECT/PNEUMATIC TRANSDUCER

ANY MATERIAL WITH A (P) PRECEEDING THE DEVICE TAG IS CONSIDERED PROPRIETARY EQUIPMENT AND IS BEING SUPPLIED BY JOHNSON CONTROLS, INC. ALL OTHER MATERIAL IS NON-PROPRIETARY EQUIPMENT.

Sequence of Operations

The digital controller, EN-4X19X will modulate heating water bridge valve, V-1 through electric/pneumatic transducer, EP-1 to maintain a secondary heating water setpoint as follows at temperature element, TE-1:

Outdoor Air Temperature	Heating Water Supply Temperature
0 F.(Adj.)	180 F.(Adj.)
60 F.(Adj.)	120 F.(Adj.)

The controller will monitor the status of secondary heating water pump, P-1 and issue an alarm to the ICS network in the event that status does not match the command. Alarm message: 'LTW-XXX Failure'

The following point objects will be adjustable from the Operator Worksation:

1. Secondary heating water supply temperture, TE-1
2. Heating water reset schedule.

The following point objects will be alarmed and monitored to the ICS.

1. Secondary Pump Status
2. High heating water supply temperature, TE-1 > 240 F.
3. Low heating water supply temperature, TE-1 < 100 F.

COPYRIGHT JOHNSON CONTROLS, INC.1993

DRAWING TITLE
Building Heating Water Bridge
Building Secondary Heating
Water Control
LTW-701

PROJECT
The Argonne National Labs
Advanced Photon Source Campus
9700 Cass Avenue South
Argonne, IL 60439

REFERENCE DRAWING	NO.	REVISION-LOCATION	ECN	DATE	BY
	3	RECORD		10/04/93	SF

SALES ENGR	PROJECT MGR	APPL. ENGR	DRAWN		APPROVED	
JP	SF	DCS	BY SF	DATE 02/07/92	BY	DATE

JOHNSON CONTROLS
Systems & Services Division
3007 WALMO ROAD
ARLINGTON HEIGHTS
ILLINOIS 60005
708/364-1500 Main
708/808-4438 Eng

CONTRACT NUMBER 91390-0009
DRAWING NUMBER 91-9-C-09A