Enclosures, EN-20100 and EN-20101 Digital ASCs for Air Handling Units, AHU-402 and AHU-404

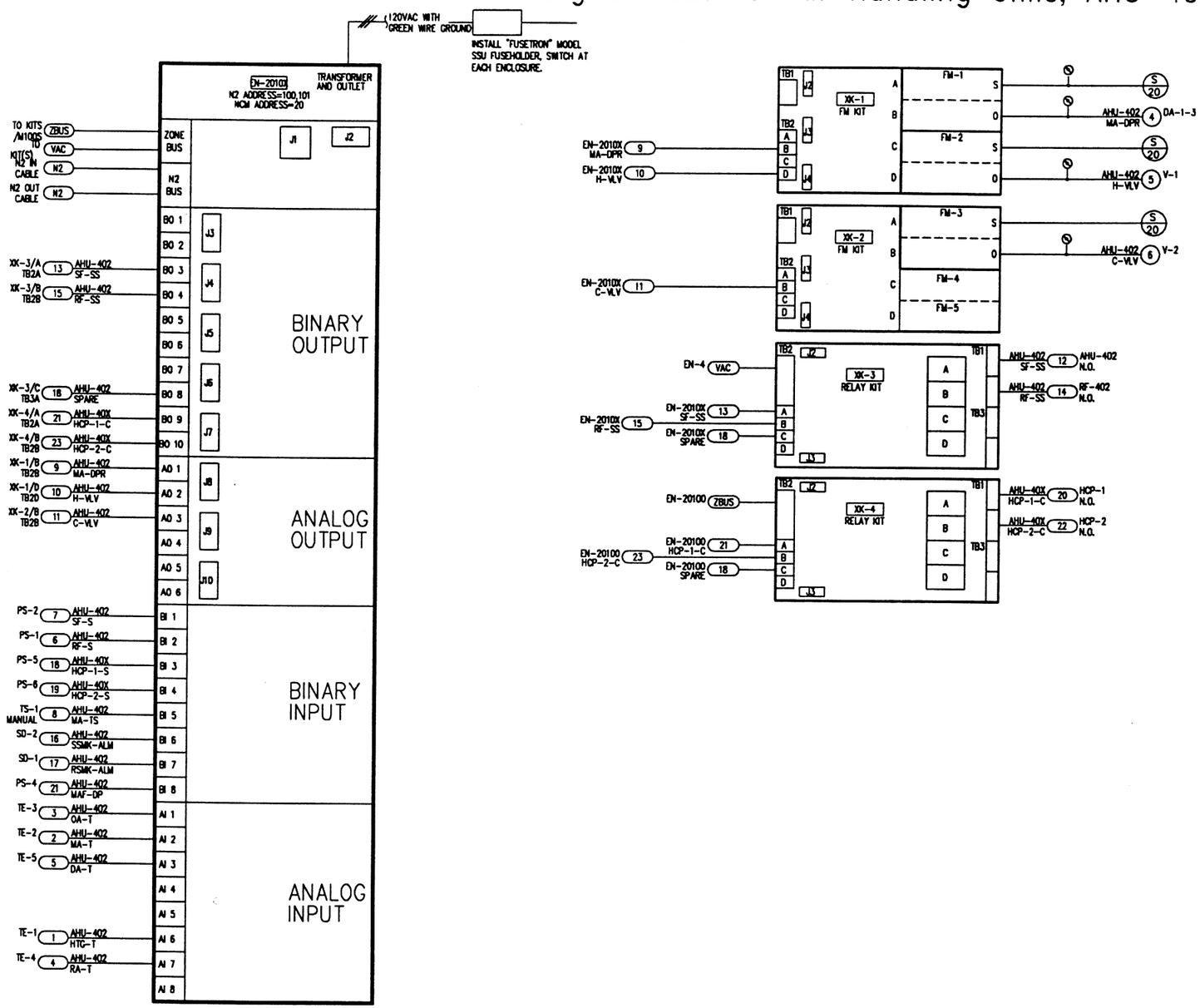

PANEL MATERIAL

	DEVICE TAG	QTY	CODE NUMBER	DESCRIPTION
(P)	FM-1-FM-3	6	FM-DAP102-0	DAP MANUAL MODULE
		6	FM-DAP103-0	E/P OUT FM FOR ASC
(P)	EN-20100	4	AS-AHU101-0	AIR HANDLING UNIT ENC/TER
(P)	EN-20101	4	AS-AHU102-0	AIR HANDLING UNIT LOGIC B
		4	EN-ENC200-0	16 X 30 ENCLOSURE FOR ASC
		4	AS-XFR100-0	100VA TRANSFORMER KIT
(P)	XX-1-XX-2	4	AS-FMK100-0	FUNCTION MOD KIT-4 SLOTS
(P)	XX-3-XX-4	4	AS-RLY100-0	LINE VOLTAGE RELAY KIT
(P)	FM-4-FM-5	4	FM-KIT127-0	EMPTY FM SLOT COVER PIECE
(P)	ACC	8	G-2010-5	0-30 PSI, 1 1/2 INCH PRESSURE GAUGE

NOTES:

1. ALL MATERIAL WITH (P) PRECEEDING THE DEVICE TAG IN THE BILL OF MATERIAL IS PROPRIETARY AND IS BEING SUPPLIED BY JOHNSON CONTROLS, INC. ALL OTHER MATERIAL IS NON-PROPRIETARY.

FILE: EN-20100

DRAWING TITLE
Enclosures EN-20100,20101
AHU100-0 ASC Controller
Digital ASC for AHU-402
and AHU-404

REFERENCE DRAWING	NO.	REVISION-LOCATION	ECN	DATE	BY
		RECORD		06/08/94	SF

SALES ENGR	PROJECT MGR	APPL. ENGR	DRAWN		APPROVED	
JP	SF	DCS	BY SF	DATE 11/14/91	BY	DATE

PROJECT
The Argonne National Labs
Advanced Photon Source Campus
9700 Cass Avenue South
Argonne, IL 60439

JOHNSON CONTROLS
Systems & Services Division

3007 MALMO ROAD
ARLINGTON HEIGHTS
ILLINOIS 60005
708/364-1500 Main
708/808-4438 Eng

CONTRACT NUMBER 91390-0009
DRAWING NUMBER 91-9-C-04B

COPYRIGHT JOHNSON CONTROLS, INC.1993