Control Hardware Locations and Communications Layout

PANEL MATERIAL

DEVICE TAG	QTY	CODE NUMBER	DESCRIPTION
FC-2	2	730.039	ACTIVE LINK-SMC
MS-1	2	PD-112-22	BUSS SSU FUSE HOLDER/
	2	PD-112-23	FUSE T-5 (5AMP) FOR
P-2	2	ENC-1000-11	ENCLOSURE 20"X20"
	2	ENC-1000-114	PLYMETAL SUBPLATE 20X20
	2	ENC-1000-116	DOOR, VENTILATED 20"X20"

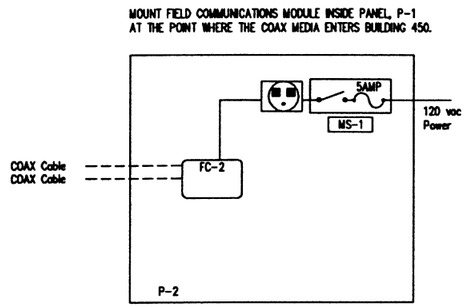

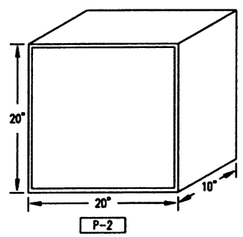

ICS Legend

- ASC Enclosure No. System
- NCU Enclosure No. Label No. 1
- NEU Enclosure No. Label No. 1
- FEU Assoc. Enclosure Label No. 1
- OWS Operator Work Station Node Address

ASC = Application Specific Controller, N2 Device(s)
NCU = Network Control Unit, N2 Control Module and/or N1 Device(s)
NEU = Network Expansion Unit, N2 Control Module Device(s)
FEU = Field Equipment Unit, Auxiliary Control Devices

N2 LINE ————————————————

N1 LINE - - - - - - - - - - - - - - - - - - -

Enclosure Numbering System

EN-X X X X X

EN-X X X X X

Assoc. NCM — N2 Address

Example

EN-10103 Controlling NCM=10 and the N2 Address is 103

NOTES:

1. SEE CONTRACT DRAWING SHEET, H212 FOR MECHANICAL EQUIPMENT LOCATIONS.
2. VAV TERMINAL UNITS ARE NOT SHOWN ON THIS DRAWING, SEE ROOM/ENCLOSURE SCHEDULE ON THE ASSOCIATED ICS DRAWING AND EQUIPMENT LOCATIONS SHOWN ON THE CONTRACT DRAWINGS.
3. COOLING ONLY VAV ASC CONTROLLER N2 ADDRESS BAND IS 121-140
4. COOLING/HEATING VAV ASC CONTROLLER N2 ADDRESS BAND IS 151-170
5. PROCESS WATER ASC CONTROLLER N2 ADDRESS BAND IS 110-111.
6. HEATING WATER BRIDGE ASC CONTROLLER N2 ADDRESS BAND IS 115-116.
7. AIR HANDLING UNIT ASC CONTROLLER N2 ADDRESS BAND IS 100-103.
8. MOUNT AIR STATION, AF-1 NEAR THE PROCESS WATER CONTROL HARDWARE IN EACH SEGEMENT.
9. VAV BOX DESIGNATIONS NOT SHOWN ON THIS DRAWING, SEE CONTRACT DRAWINGS AND JCI DRAWINGS, 91-9-E-03D,E.
10. N1 COMMUNICATION MEDIA BETWEEN THE E.A.A AND THE EXPERIMENT HALL IS COAX.
11. N2 COMMUNICATION MEDIA BETWEEN EXPERIMENT HALL SEGMENTS IS TWIN TWISTED/SHIELDED 18 AWG CABLE.
12. FIRE SYS/ICS INTERFACE ADDRESS IS 117

COPYRIGHT JOHNSON CONTROLS, INC.1993

FILE: 400_LAY
DCODE: 19940307.1755

REFERENCE DRAWING	NO.	REVISION-LOCATION	ECN	DATE	BY
	4	FIRE/ICS INTFACE		03/07/94	SF
	3	GENERAL		06/20/93	SF
	2	GENERAL		11/19/92	SF

DRAWING TITLE
Building 400, Experiment Hall
Experiment Hall, Storage Ring
Control Hardware Locations
and Communications Layout

SALES ENGR	PROJECT MGR	APPL. ENGR	DRAWN	APPROVED
JP	SF	DCS	BY SF DATE 01/22/92	BY DATE

PROJECT
The Argonne National Labs
Advanced Photon Source Campus
9700 Cass Avenue South
Argonne, IL 60439

JOHNSON CONTROLS
Systems & Services Division

3007 MALMO ROAD
ARLINGTON HEIGHTS
ILLINOIS 60005
708/364-1500 Main
708/806-4438 Eng

CONTRACT NUMBER 91390-0009

DRAWING NUMBER 91-9-E-08A