Panel, P-1, Enclosure Detail for Process Water Bridges.

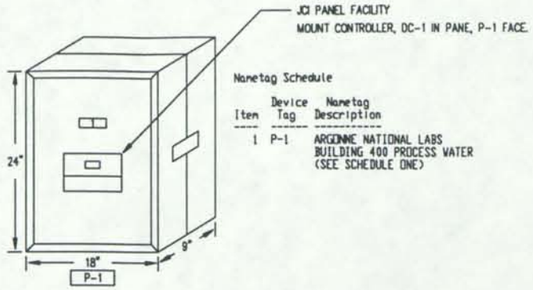

Nametag Schedule

Item	Device Tag	Nametag Description
1	P-1	ARGONNE NATIONAL LABS BUILDING 400 PROCESS WATER (SEE SCHEDULE ONE)

PANEL MATERIAL

DEVICE TAG	QTY	CODE NUMBER	DESCRIPTION
(P) ACC	18	M-8000-393	SCREW-ON LAMCOID NAME-
(P) ACC	576	PD-113-15	TERM SEC MINIATURE 600V
(P) ACC	90	PD-113-3	TERMINAL BLOCK; MEDIUM
(P) MS-1	18	PD-112-22	BUSS SSU FUSE HOLDER/
	18	PD-112-23	FUSE T-5 (5AMP) FOR
(P) P-1	18	M-8100-1824	CONTROL CABINET;STD. FACE
(P) TX-1	18	Y64AL-2C	TRANSFORMER
(P) DC-1	18	LCP200-0	DIGITAL CONTROLLER
(P) EP-1,2	36	EP-8000-4	ELECT/PNEUMATIC TRANSDUCER
(P) PI-1-PI-3	54	G-2010-5	AIR GAGE 1-1/2"
(P) R-1-R-4	72	PD-109-21	RELAY; PLUG IN 3PDT
	72	PD-101-35	SOCKET; 11PIN BLADE

ANY MATERIAL WITH A (P) PRECEEDING THE DEVICE TAG IS CONSIDERED PROPRIETARY EQUIPMENT AND IS BEING SUPPLIED BY JOHNSON CONTROLS, INC. ALL OTHER MATERIAL IS NON-PROPRIETARY EQUIPMENT.

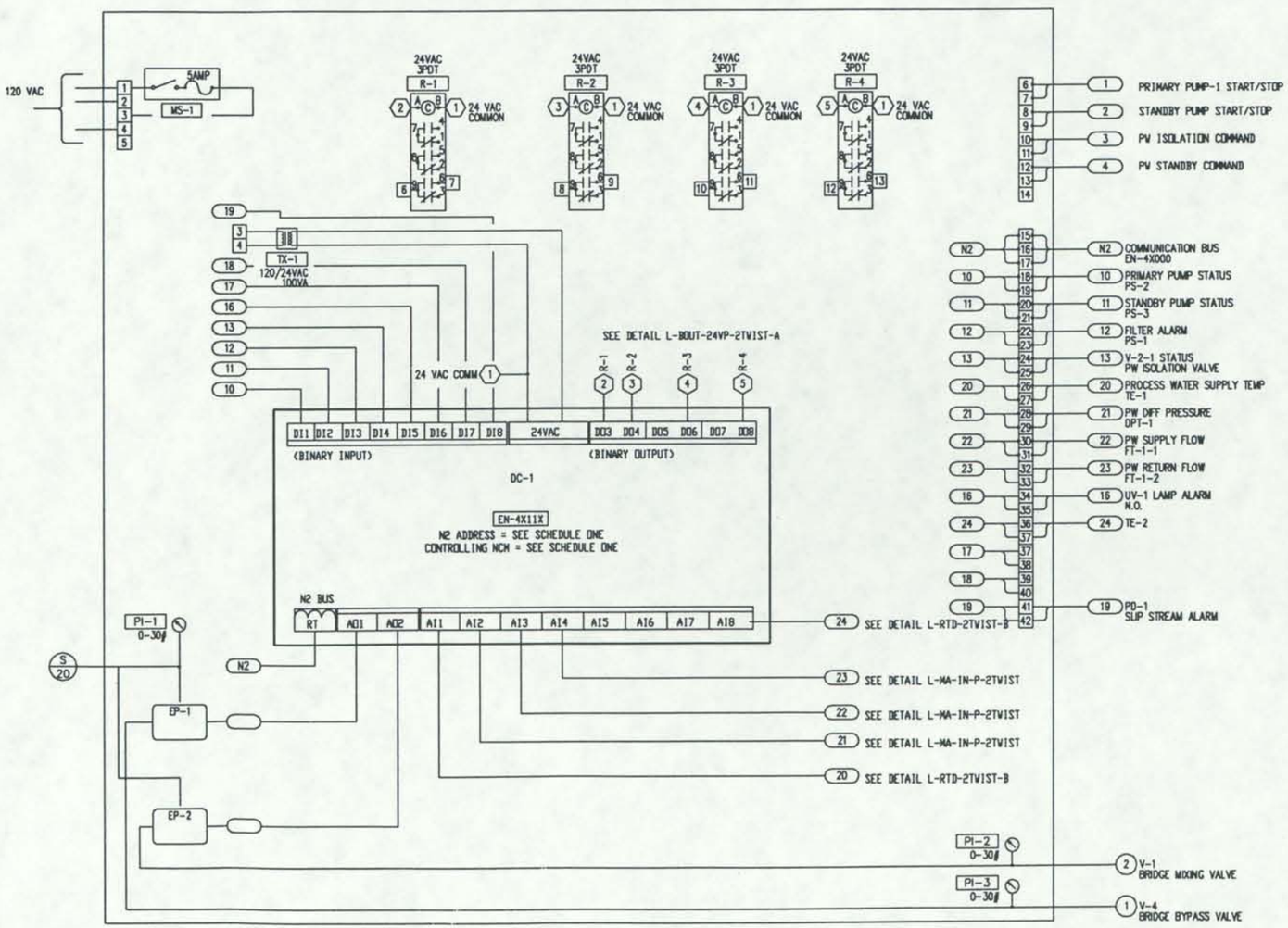

Exp Hall/Enclosure Schedule
Schedule One

LINE 3 OF M-8000-393

Exp Hall Segment Number	Process Water System Tag Number	ICS Enclosure Tag Number	Line Three of Tag on P-1
1	DI-501	EN-40110	DI-501/EN-40110
2	DI-502	EN-40111	DI-502/EN-40111
3	DI-503	EN-41110	DI-503/EN-41110
4	DI-504	EN-41110	DI-504/EN-41110
5	DI-505	EN-42111	DI-505/EN-42110
6	DI-506	EN-42111	DI-506/EN-42111
7	DI-507	EN-43110	DI-507/EN-43110
8	DI-508	EN-43111	DI-508/EN-43111
9	DI-509	EN-44110	DI-509/EN-44110
10	DI-510	EN-44111	DI-510/EN-44111
11	DI-511	EN-45110	DI-511/EN-45110
12	DI-512	EN-45111	DI-512/EN-45111
13	DI-513	EN-46110	DI-513/EN-46110
14	DI-514	EN-46111	DI-514/EN-46111
15	DI-515	EN-47110	DI-515/EN-47110
16	DI-516	EN-47111	DI-516/EN-47111
17	DI-517	EN-48110	DI-517/EN-48110
18	DI-518	EN-48111	DI-518/EN-48111

COPYRIGHT JOHNSON CONTROLS, INC.1991

FILE: PW_BDG1

DRAWING TITLE
Process Water Bridge
Controls
Building 400 Experiment Hall
Segments

REFERENCE DRAWING	NO.	REVISION-LOCATION	ECN	DATE	BY
	2	ADD ICS ALMS		11/13/92	SF
	1	GENERAL		07/31/92	SF

SALES ENGR	PROJECT MGR	APPL. ENGR	DRAWN		APPROVED	
DB	SP	SF	BY SF	DATE 01/29/92	BY	DATE

PROJECT
The Argonne National Labs
Advanced Photon Source Campus
9700 Cass Avenue South
Argonne, IL 60439

JOHNSON CONTROLS
Systems & Services Division

3007 MALMO ROAD
ARLINGTON HEIGHTS
ILLINOIS 60005
708/364-1500 Main
708/808-4438 Eng

CONTRACT NUMBER
91390-0009

DRAWING NUMBER
91-9-E-01B