# Dual Temperature Heat Exchanger

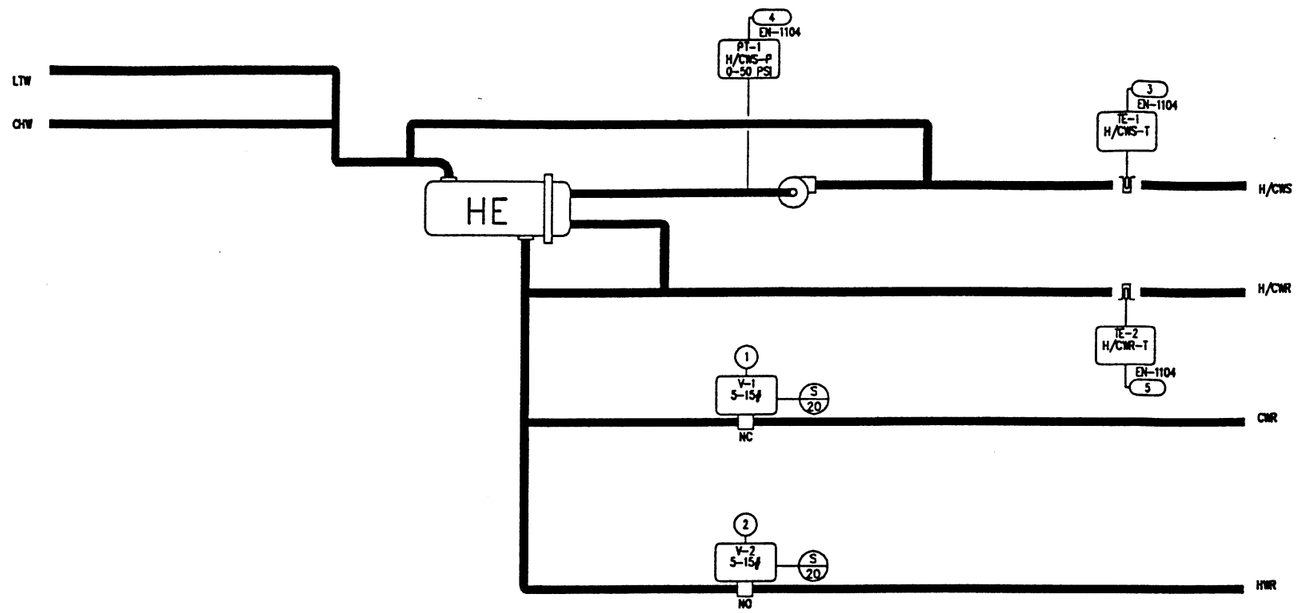


FIELD MATERIAL

| DEVICE TAG | QTY | CODE NUMBER | DESCRIPTION |
|---|---|---|---|
| CS-1 | 1 | H908 | HAWKEYE CURRENT SENSOR-VERIS IND |
| PT-1 | 1 | PT-550-1-4G | PRESSURE TRANSMITTER-TRIAD |
| R-1 | 1 | RIBUIC | SPDT RELAY IN A BOX-FUNCT DEV |
| TE-1-TE-2 | 2 | TE-6000-4 | SENSOR, 1000 OHM +/- .25% |
| | 2 | TE-6001-3 | PACKING NUT & FTG.S |
| | 2 | VZ-1000-2 | STAINLESS STEEL WELL,1/2" |
| V-1-V-2 | 2 | ---- | SEE VALVE SCHEDULE |

## Pump Control

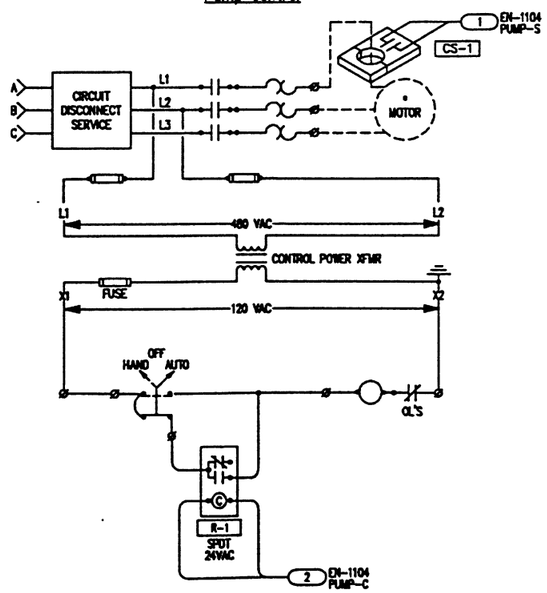


## Sequence of Operations

COOLING MODE-DETERMINED BY BO OBJECT 'HTGCLG-C'=1

THE DIGITAL CONTROLLER, EN-01104 WILL MODULATE COOLING CONTROL VALVE, V-1 TO MAINTAN A SUPPLY WATER TEMPEATURE OF XX F. THE ICS WILL ALARM THE OPERATIONS GROUP IN THE EVENT THAT THE SUPPLY WATER TEMPERATURE RISES ABOVE 45 F. IN THE COOLING MODE.

HEATING MODE-DETERMINED BY BO OBJECT 'HTGCLG-C'=0

THE DIGITAL CONTROLLER, EN-01104 WILL MODULATE HEATING CONTROL VALVE, V-2 TO MAINTAIN A HOT WATER SETPT ACCORDING TO THE RESET SCHEDULE. THE SYSTEM FAILS TO HEATING MODE.

PUMP STATUS WILL BE MONITORED BY CURRENT SWITHCE, CS-1.

PUMP WILL RUN CONINUOSLY, PUMP WILL RESTART IN EVENT OF POWER FAILURE.

PRESSURE TRANSMITTER, PT-1 WILL MONITOR THE SYSTEM WATER PRESSURE AND ALARM THE ICS ON A LOW LEVEL OF 35 PSI.

HEATING WATER RESET SCHEDULE:

| OUTDOOR AIR TEMP | HEATING WATER SETPOINT |
|---|---|
| -10 F. | 180 F. |
| 70 F. | 76 F. |

IN CONSIDERATION OF THE RECEIPT OF THIS DOCUMENT, THE RECIPIENT AGREES NOT TO REPRODUCE, COPY, USE OR TRANSMIT THIS DOCUMENT AND/OR THE INFORMATION THEREIN CONTAINED, IN WHOLE OR IN PART, OR TO SUFFER SUCH ACTION BY OTHERS, FOR ANY PURPOSE, EXCEPT WITH THE WRITTEN PERMISSION OF JOHNSON CONTROLS, INC. AND FURTHER AGREES TO SURRENDER SAME TO JOHNSON CONTROLS, INC. UPON DEMAND.

COPYRIGHT JOHNSON CONTROLS, INC.1995

DRAWING TITLE
H/CW Heat Exchanger

PROJECT
The Argonne National Labs
APS Users Residance Facility
9700 Cass Avenue South
Argonne, IL 60439

| REFERENCE DRAWING | NO. | REVISION-LOCATION | ECN | DATE | BY |
|---|---|---|---|---|---|
| | 2 | AS BUILT | | 07/08/96 | SAC |
| | 1 | GENERAL | | 08/11/95 | SF |

| SALES ENGR | PROJECT MGR | APPL. ENGR | DRAWN | | APPROVED | |
|---|---|---|---|---|---|---|
| JS | SF | DCS | BY SF | DATE 06/15/95 | BY | DATE |

JOHNSON CONTROLS
Systems & Services Division

3007 Malmo Drive
Arlington Hts., IL
60005
847-364-1500

CONTRACT NUMBER 95010-1013

DRAWING NUMBER 91-9-H-04A

FILE: URF_MAIN