Make-Up Air Handling Units, AHU-4003 Typical For AHU-4004 (Except As Noted)
Flow Diagram and Equipment Locations

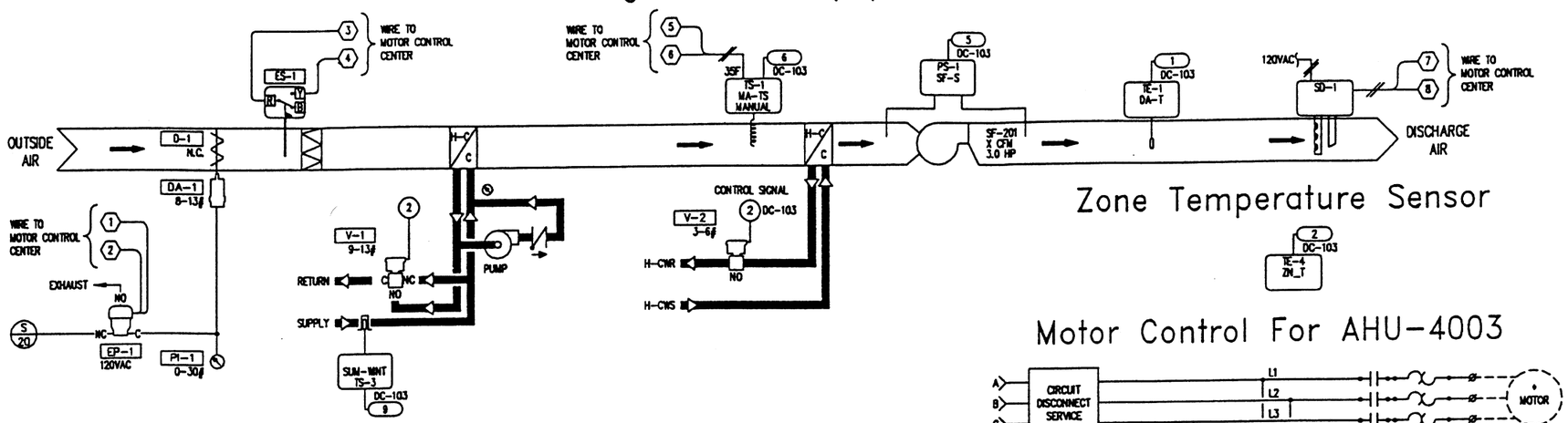

Zone Temperature Sensor

Motor Control For AHU-4003

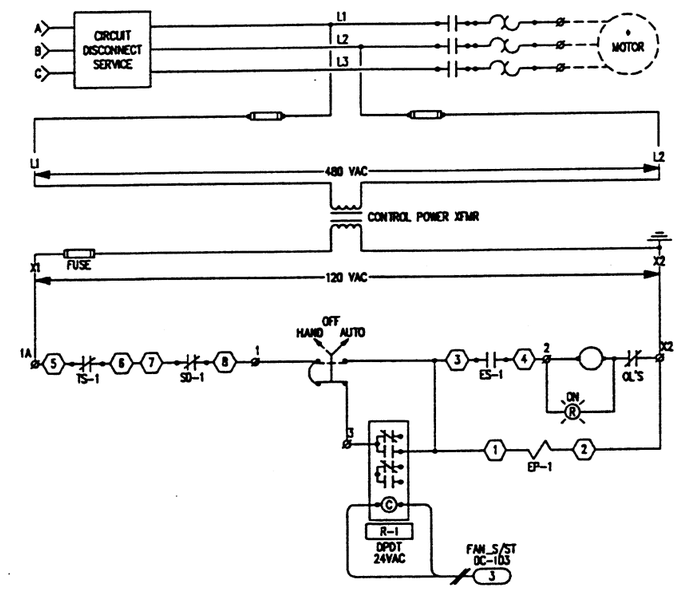

Line Voltage Control For Pump P-4003/4004

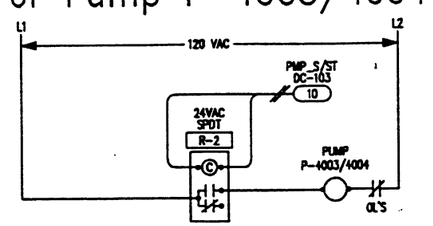

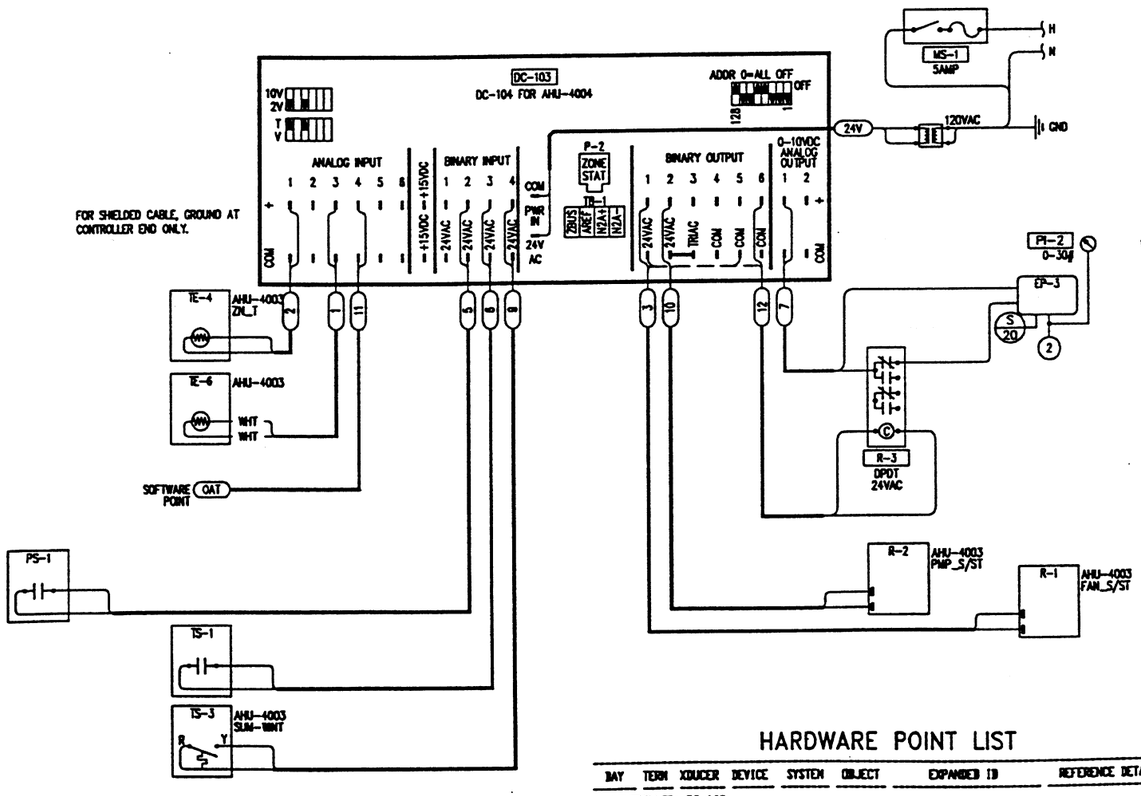

HARDWARE POINT LIST

BAY	TERM	XDUCER	DEVICE	SYSTEM	OBJECT	EXPANDED ID	REFERENCE DETAIL
CONTROLLER:		DC-103					
AI	AI1		TE-4	AHU-4003	ZN_T	ZONE TEMPERATURE	—
AI	AI3		TE-1	AHU-4003	DA-T	DISCHARGE AIR TEMP	—
AI	AI4			AHU-4003	OA-T	OUTSIDE AIR TEMP	—
AO	AO1		EP-3	AHU-4003	VLV_C	VALVE CONTROL	—
BI	BI2		PS-1	AHU-4003	SF-S	SUPPLY AIR FLOW	A-BIN-2TWIST-L-1
BI	BI3		TS-1	AHU-4003	MA-TS	LOW LIMIT TEMP SWITCH	A-BIN-2TWIST-L-Q
BI	BI4		TS-3	AHU-4003	SUM-WINT	SUM-WINTER SUPPLY TEMP	—
BO	BO1		R-1	AHU-4003	FAN_S/ST	FAN START/STOP	—
BO	BO2		R-2	AHU-4003	PMP_S/ST	PUMP START/STOP	—
BO	BO6		R-3	AHU-4003	LL-VLV-C	LOW LIMIT VALVE CONTROL	—

FIELD MATERIAL

DEVICE TAG	QTY	CODE NUMBER	DESCRIPTION
D-1	2	—	SEE DAMPER SCHEDULE
DA-1	2	D-3062-3	DAMPER ACTUATOR 8-13#
EP-1	2	V-2410-2	VALVE, SOL. AIR, 3-WAY
PI-1-PI-2	4	G-2010-5	AIR GAGE 1-1/2"
PS-1	2	P32AF-2C	SENSITIVE DIFF PRES CTL
	4	FTG18A-600R	REMOTE MTD PROBE
R-1,R-3	4	RH2B-AC24L	24VAC DPDT RELAY W/IND LITE-IDEC
	4	SH2B-05	DPDT RELAY BASE-IDEC
R-2	2	R10U1S	SPDT RELAY IN A BOX W/HOA-FUNCT DEV
SD-1	2	TC807A1036	SMOKE DETECTOR BASE-HONEYWELL
	2	14506873-001	SMOKE DETECTOR HEAD-HONEYWELL
	2	ST-10	SAMPLING TUBE FOR
TE-1	2	TE-6311P-1	TEMP SENSOR; 1000 OHM, NI
TE-4	2	TE-6314P-1	TEMP SENSOR; 1000 OHM, NI
TS-1	2	A70HA-1C	TEMP CONTROL 4 WIRE, 2-C
TS-3	2	A19ABC-11C	GENL PURPOSE TEMP CONTROL
	2	VEL16A-601R	BULB WELL ASSY
V-1	2	VTN-TN047-314	VALVE; 1/2" NIX 9-13 4.7
V-2	2	V-3754-1022	3/4" NO GL 3-68 W/A 8.6CV

PANEL MATERIAL

DEVICE TAG	QTY	CODE NUMBER	DESCRIPTION
DC-103	2	AS-UNT141-101	6 ISO BO
	2	EN-EVC25-0	UPW ENC 2 UNIT W/50VA XFRM
EP-3	2	EP-0000-2	EP TRANSDUCER; 0/10V HI
	2	R-3718-2007	COUPLING, AQUA, .007"
MS-1	2	PB-112-22	BUSS SSU FUSE HOLDER/
	2	PB-112-23	FUSE T-5 (5AMP) FOR

Sequence Of Operations

THE DIGITAL CONTROLLER WILL OPEN THE OUTSIDE AIR DAMPER, D-1 AND THE SUPPLY FAN WILL START THROUGH END SWITCH, ES-1.

COOLING MODE-DETERMINED BY TEMPERATURE SWITCH, TS-3

THE DIGITAL CONTROLLER, DC-10 WILL MODULATE HTG/CLG CONTROL VALVES, V-1 AND V-2 IN A REVERSE ACTING MODE TO MAINTAN A ZONE TEMPEATURE OF 72 F.

HEATING MODE-DETERMINED BY TEMPERATURE SWITCH, TS-3

THE DIGITAL CONTROLLER, DC-103 WILL MODULATE HTG/CLG CONTROL VALVES, V-1 AND V-2 IN A DIRECT ACTING MODE TO MAINTAN A ZONE TEMPEATURE OF 72 F.

THE PUMP WILL START THROUGH CONTROL RELAYS, R-1 AT OUTDOOR AIR TEMPERATURES BELOW 40 F.

LOW LIMIT TEMPERATURE SWITCH WILL STOP THE SUPPLY FAN, CLOSE THE OUTDOOR AIR DAMPER AND OPEN THE H/C VALVE IN THE EVENT THAT THE H/C COIL DISCHARGE AIR TEMPERATURE DROPS BELOW 35 F.

DUCT SMOKE DETECTOR WILL STOP THE FAN SYSTEM IN THE EVENT THAT SMOKE IS DETECTED.

CONTROL VALVES, V-1 AND V-2 WILL OPEN 100 PERCENT IF THE FAN STATUS IS "OFF".

DISCHARGE AIR TEMPERATURE ELEMENT, TE-1 WILL CONTROL VALVES, IN THE HEATING MODE, TO A LOW LIMIT OF 55 F.(ADJ.)

IF TS-1 TRIPS, RELAY R-3 OPENS AND FAILS VALVES TO NORMAL POSITION.

COPYRIGHT JOHNSON CONTROLS, INC.1995

DRAWING TITLE
Make Up Air Handling Units, AHU-4003 AND AHU-4004

REFERENCE DRAWING	NO.	REVISION-LOCATION	ECN	DATE	BY
	2	AS BUILT		07/08/96	SAC
	1	GENERAL		08/11/95	SF

SALES ENGR	PROJECT MGR	APPL. ENGR	DRAWN	APPROVED
JS	SF	DCS	BY SF DATE 04/28/95	BY DATE

FILE: URF_MAU1

PROJECT
The Argonne National Labs
APS Users Residance Facility
9700 Cass Avenue South
Argonne, IL 60439

JOHNSON CONTROLS
Systems & Services Division
3007 Malmo Drive
Arlington Hts., IL
60005
847-364-1500

CONTRACT NUMBER 95010-1013

DRAWING NUMBER 91-9-H-01A