WARNING: DRAWING MAY BE REDUCED

UTILITY BLDG. 2A
ROOF FRAMING
PLAN
DPK

450 S203
4SUT2R
12/06/90 13:11:27

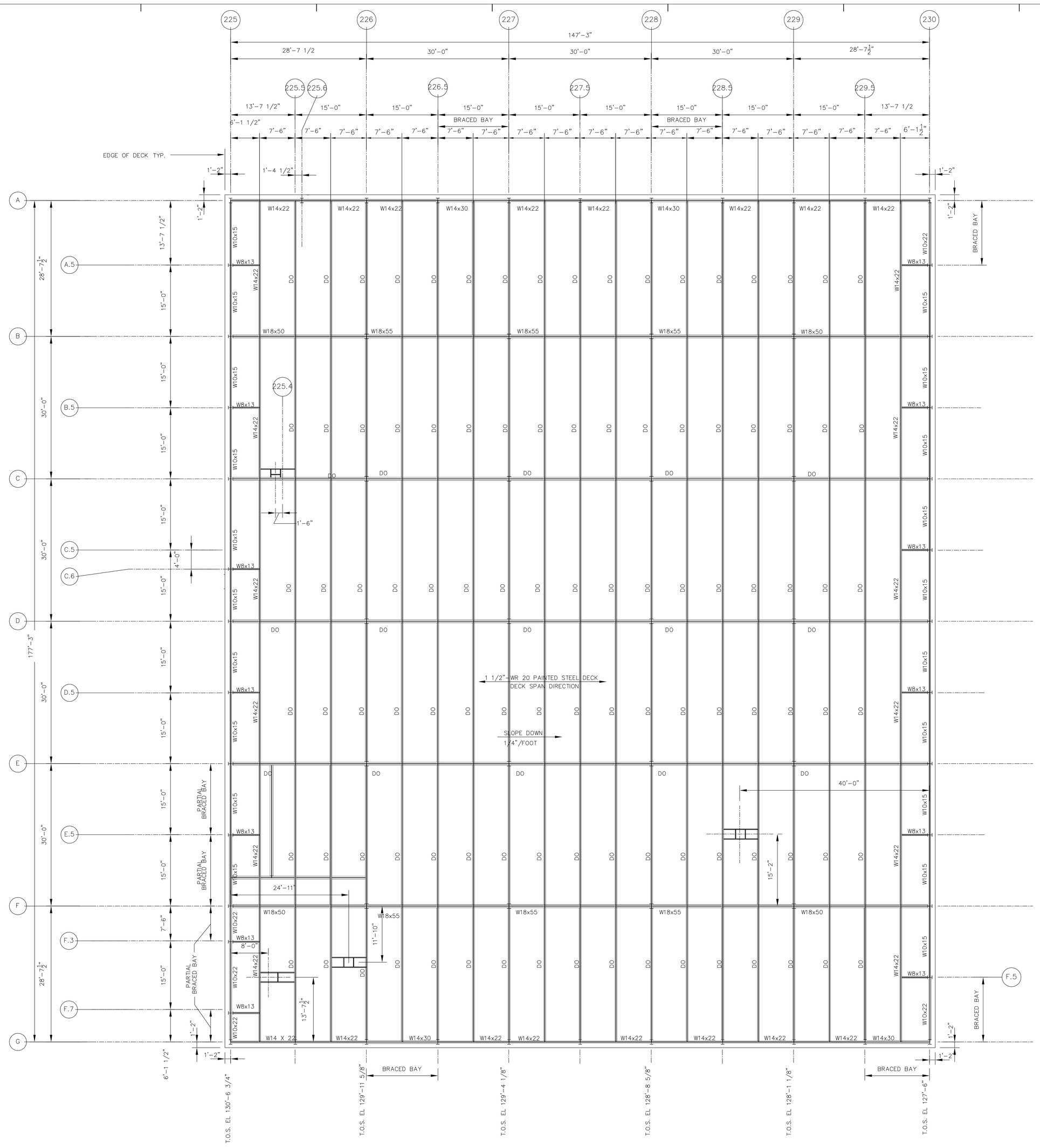

ROOF FRAMING PLAN
1/8 = 1'-0"

NOTES:

1. SEE ARCHITECTURAL DRAWINGS FOR ROOF OPENING DIMENSIONS

N

8' 4' 0 8' 16'
SCALE 1/8" = 1'-0"

Advanced Photon Source
ARGONNE NATIONAL LABORATORY

KNIGHT

ARCHITECTURE & ENGINEERING

KNIGHT ARCHITECTS ENGINEERS PLANNERS, INC.

549 West Randolph Street
Chicago, IL 60606

CONSULTANTS

STRUCTURAL ENGINEERING
Tudor Engineering Company
Consulting Engineers and Planners
1800 Harrison St.
Oakland, CA 94612

CIVIL ENGINEERING
Globetrotters
Engineering Corporation
Consulting Engineers
300 South Wacker Drive
Chicago, IL 60606

VIBRATION AND ACOUSTICS
Acentech Incorporated
Acoustical & Environmental Technologies
21120 Vanowen Street
Canoga Park, CA 91303

ROOF

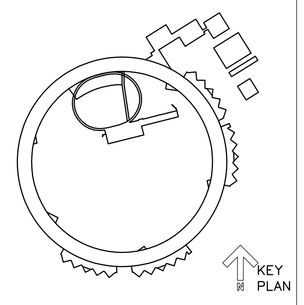

UTILITY BLDG. 2A

REV. NO.	DOCUMENT CHANGE NOTICE	BY	APVD	DATE

THIS DRAWING IS THE PROPERTY OF
ARGONNE NATIONAL LABORATORY

PROJECT TITLE
ADVANCED PHOTON SOURCE
CONVENTIONAL FACILITIES
PROJECT NO. ANL 01907 KNIGHT 4900
DOCUMENT TITLE
ROOF FRAMING PLAN

DRAWN BY A/E- ANL- AJS	PROJECT MANAGER A/E- R. MELLOTT DATE-	BINDING ORDER
DESIGNED BY A/E- ANL-	PROJECT MANAGER ANL-	FACILITY NO(S)
CHECKED BY A/E- ANL- JLW	ANL APPROVAL DATE 12-15-00	
MSTR. DISK ID / VOL. NO.	FILE NAME / STATUS S-001	

FACILITY DOCUMENT NUMBER
JO 450-001W -
WBS DOCUMENT NUMBER
75000-25 -

PLOT DATE 12/06/90 13:11:27 PLOT 0 PLOT SCALE 1/8" = 1'-0" FILENAME: ROOFPLAN

PACKAGE: UTILITY BLDG. 2A