PACKAGE
Title1
Title2
USERNAME

AREA1 AREA3
Filename
Date _ Time

RF BLDG.420–PIPING PLANS DRAWING LIST

P100D	DRAWING LIST
P107	PROCESS PIPING–WEST
P108	PROCESS PIPING–MID
P109	PROCESS PIPING–EAST
P110	PROCESS PIPING–SECTIONS
P111	PROCESS PIPING–SECTIONS
P112	PROCESS PIPING–SECTIONS

LEGEND

PWS–PROCESS WATER SUPPLY
PWR–PROCESS WATER RETURN

- GATE VALVE
- BUTTERFLY VALVE
- CHECK VALVE
- FLEX CONNECTION
- BALL VALVE
- BASKET STRAINER
- 90°ELBOW
- TEE
- CONCENTRIC REDUCER

PRELIMINARY
FOR REVIEW ONLY

4′ 2′ 0 4′ 8′
SCALE 1/4″ = 1′-0″

Advanced Photon Source
ARGONNE NATIONAL LABORATORY

Piping Design Consultants
200 E. HOWARD
Suite 236
DesPlaines, Illinois,60018

847–795–9800

LEVEL 1

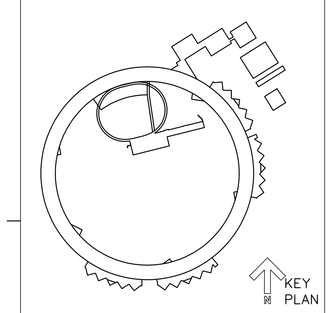

RF BLDG. 420

THIS DRAWING IS THE PROPERTY OF
ARGONNE
NATIONAL LABORATORY

PROJECT TITLE
ADVANCED PHOTON SOURCE
CONVENTIONAL FACILITIES
PROJECT NO. ANL 01907 KNIGHT 4900
DOCUMENT TITLE
BLDG.420 DWG LIST
P100D

DRAWN BY A/E– ANL–	PROJECT MANAGER A/E– DATE97–30–90	BINDING ORDER
DESIGNED BY A/E– ANL–	PROJECT MANAGER ANL–	FACILITY NO(S)
CHECKED BY A/E– ANL–	ANL APPROVAL DATE	

MSTR. DISK ID	VOL. NO.	FILE NAME	STATUS
		Filename	

FACILITY DOCUMENT NUMBER
JO 411 –001WA A000
WBS DOCUMENT NUMBER
7103 001 AA