Physical Design of Horizontal Beam Scraper: Summary

Yong-Chul Chae
Advanced Photon Source/Accelerator Physics Group
April 13, 2005

1. The baseline design is provided by M. Jaski (3/28/05)

- Need to determine L and T: shown has L=12 cm, T=8 mm.
- Assume inboard and outboard blades are symmetrically located by 4-mm away from the beam: worst case.

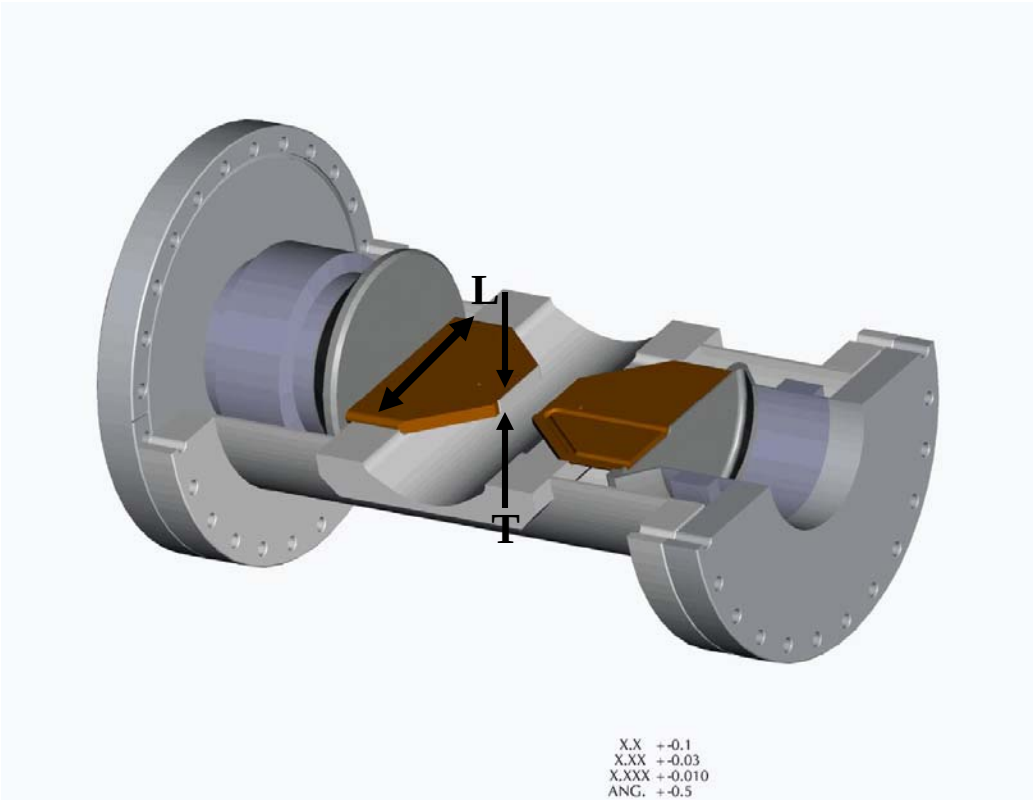

2. Assessment of Wakefield Effect

- We use the tune shift as the design figure of merit, which needs to be compared with the vertical tune shift caused by 5-mm ID chamber, or the synchrotron tune; expect the serious effect as great as 5-mm ID chamber.
- Formula (Kick Factor): $k_x\,[V/C/m] = \dfrac{\int W_x(s)\lambda(s)ds}{Q^2}$
- Formula (Tune Shift): $\Delta Q_{x,y} = \dfrac{I_b}{4\pi(E/e)f}\sum_i \beta_{x,y} k_{x,y}(\sigma)$

Table 1: Kick factor and tune shift estimate of 5-mm ID chamber and horizontal scrapers of various L and T parameters.

Component	Plane	σ_z (mm)	$k_{x,y}$ (V/C/m)	$\beta_{x,y}$ (m)	$\Delta Q_{x,y}$
5-mm ID Chamber	y	5	1.2×10^{15}	4	1.0×10^{-3}
Horizontal Scraper	x	10	$(2.8 – 4.2) \times 10^{14}$	20	$(1.15 – 1.75) \times 10^{-3}$

Table 2: Kick factor of a horizontal scraper for various L and T parameter (σ_z=10 mm).

	T=10 mm	T=20 mm	T=30 mm	T=40 mm
L=12 cm	3.19×10^{14}	3.02×10^{14}	3.46×10^{14}	4.21×10^{14}
L=18 cm	2.76×10^{14}	2.05×10^{14}	2.83×10^{14}	3.43×10^{14}

Table 3: Horizontal tune shift by a horizontal scraper for various L and T parameters (σ_z=10 mm).

	T=10 mm	T=20 mm	T=30 mm	T=40 mm
L=12 cm	1.33×10^{-3}	1.26×10^{-3}	1.44×10^{-3}	1.75×10^{-3}
L=18 cm	1.15×10^{-3}	0.85×10^{-3}	1.18×10^{-3}	1.43×10^{-3}

- We found L=18 cm, and T=20 mm is the optimum pair; but thin blades exhibit very long-ranged wake which will cause coupled-bunch instabilities just like the rf-cavity's high order mode (HOM) does.
- This long-ranged wake is caused by the trapped field around the thin blades as seen in Fig. 1 for T=30 mm; we observed the trapped mode for T=10, 20, and 30 mm. This behavior disappears when T=40 mm.

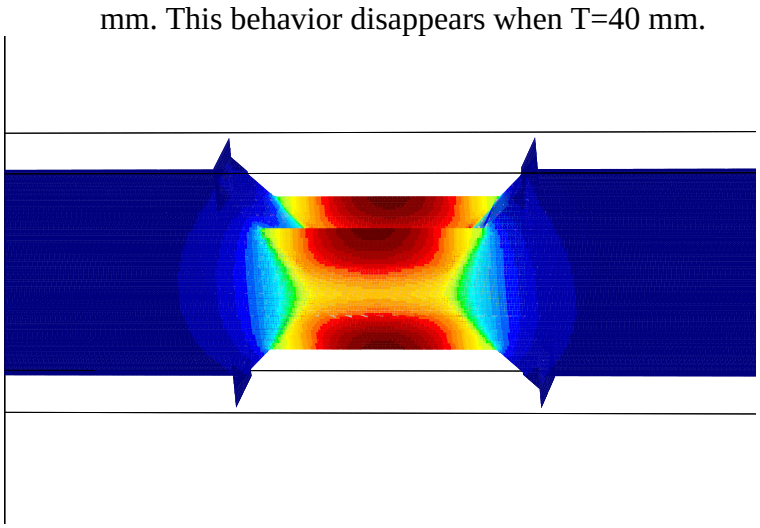

Fig. 1 Magnetic field trapped around the blades.

3. Assessment of trapped modes

- T=10, 20, 30mm has the very long range wake; the impedance exhibit high-Q resonator as shown in Fig. 2.

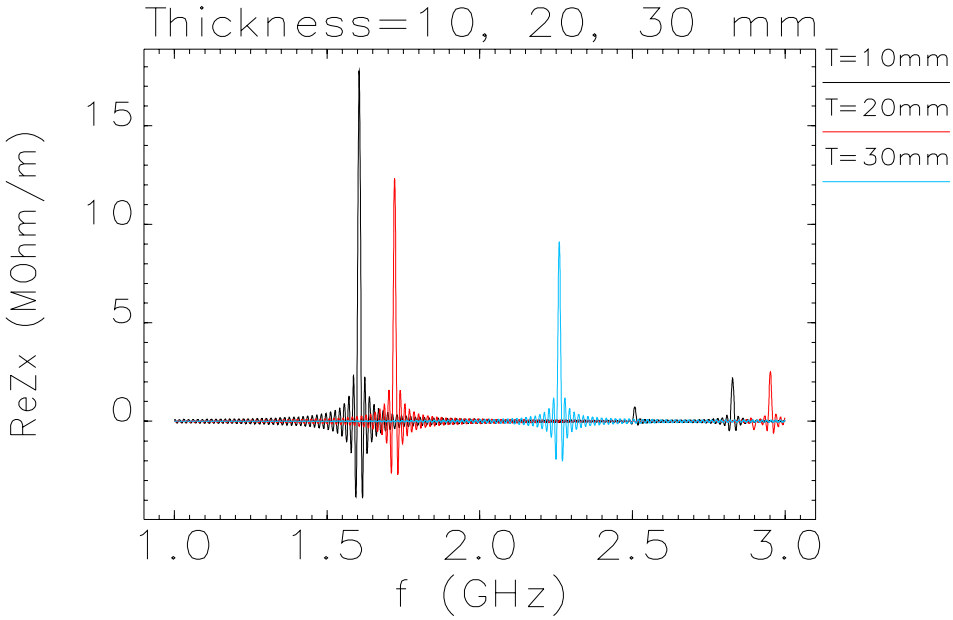

Fig. 2: The impedance of horizontal scraper of T=10 mm (black), 20 mm (red), 30 mm(blue); as T increases, the impedance decreases.

- We analyzed T=30 mm case; we assumed a uniform bunch distribution with total current I=100 mA. Its result is in Table 4. Since the growth rate is greater than the storage ring's radiation damping rate (106/s), the stored beam will suffer the coupled bunch instabilities with possible beam loss, of which situation we should avoid.

Table 4: Resonator parameter and growth rate for T=30 mm

Thickness, T (mm)	Resonant Frequency, $\omega_r/2\pi$ (GHz)	Quality Factor, Q	Shunt Impedance, R_t (MΩ/m)	**Growth Rate, τ^{-1} (1/sec)**
30	2.26	2970	79	**240**

In the above analysis we used the resonator impedance model

$$Z_t(\omega) = \left(\frac{\omega_r}{\omega}\right)\frac{R_t}{1 + jQ(\omega/\omega_r - \omega_r/\omega)},$$

and we used the growth rate formula in the form

$$\tau^{-1} = \frac{cI_{total}}{4\pi R(E/e)}\beta\sum_p \mathrm{Re}\, Z_\perp(\omega_p).$$

- Conclusion: the thickness is important in order to avoid the coupled bunch instability; it should be about 40 mm.

4. Sumary

- We prefer thin blades which have less harmful effect on the single bunch instability; the figure of merit is small tune shift.
- However, we found that thin blades would cause the coupled bunch instability at 100 mA operation, that can't be easily cured unless the system is passively safe.
- We decided to have thick blades whose thickness is close to 40 mm
- L=12 cm design will have 20% larger single bunch current effect compared to L=18 cm design; however, the compact design saving the precious space in the rf-straight area outweigh the savings in impedance.
- With L=12cm design, the worst effect to the beam would be what 5-mm ID chamber had done to the beam; we may need to increase the horizontal chromaticity up to 6-8 in order to store 5-mA in the single bunch. This is no surprising because, as soon as MB suggested to install the blade by 4-mm away from the beam, we expected this much effect.
- We will further optimize the blades in order to reduce the tune shift.

V. Conclusion

We determined that L=12 cm and T=40 mm are acceptable design parameters by assessing its effect on the beam.