Scraper Bellows Cycle Test Meeting Minutes

Thursday, March 24, 2005
From Mark Jaski

Attendees
Capatina, Daniela
Gagliano, Joseph
Goeppner, George A.
Hoyt, John
Humbert, Jim
Jaski, Mark
Putnam, Cedric C.
Sharma, Sushil

A preliminary design of the scraper bellows test was presented (shown in figure 1). The following is a list of issues that were discussed:

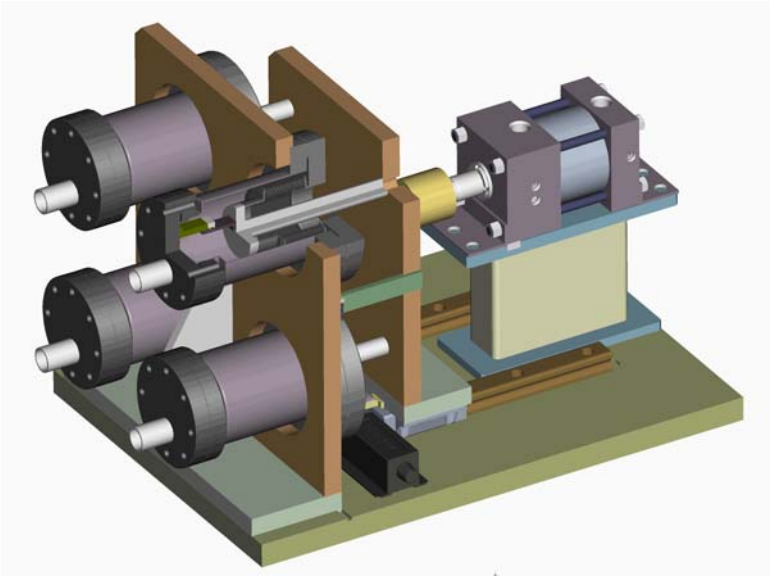

Figure 1: Scraper bellows test

1) This bellows test unit is for a 300-200 size bellows. A larger size bellows may be required if the scraper blade gets longer. The length of the scraper blade must be confirmed with Y. C. Chae so the bellows size can be confirmed.

2) Pay strict attention to the bellows weld. It is possible that this could be a failure point.

3) Check the bellows cuff material. If it is AM350 check how AM350 welds.

4) Put switches on the cylinder to ensure full cylinder strokes are achieved during testing.

5) Set a counter for each of the three switches that are to be tested.

6) Set a counter for each of the four bellows that are to be tested. Once a bellows fails, record the cycle life of that bellows, remove that bellows from the test, and continue the test without that bellows. Repeat this procedure until all bellows have failed.

7) Use the correct verbiage for vacuum pressure. (i.e. when the pressure rises above a set point instead of when the pressure drops below a set point).

8) Check how the hoop stress changes when going from a small diameter bellows to a larger diameter bellows.

9) The test will be done using ultra-high vacuum. It is expected that after a leak starts, the leak rate can be determined, monitored, and recorded until the leak becomes so large that ultra-high vacuum can no longer be maintained.

10) Include Joe Gagliano in the manifold design.

11) Check if RF fingers are needed on the horizontal scraper. The RF finger wear test will be done regardless.

12) There was concern about the cycle time for the air cylinder. One cycle every ½ second required the cylinder to travel 1 inch in 1/8 second during either the extension or retraction. This speed was thought to be excessive and may be difficult to achieve with speed controls and cushions. Adjustment of the speed controls and cushions to lightly could cause banging of the structure. This cycle time should be reviewed.