New Horizontal Scraper Blade Thermal Analysis

Configuration 02

By Mark Jaski
APS ASD/ME Group
March 7, 2005

Introduction

A new horizontal scraper is proposed to be installed in sector 37. The scraper assembly will have two blades, an inboard blade and an outboard blade. The outboard blade will be exposed to the bending magnet photon beam. The outboard blade must be designed to withstand this heat load at 300 mA. This paper discusses the analysis of the heat load on this outboard horizontal scraper blade.

Beam Power

Figure 1 shows the newly proposed scraper positioned 9.97m downstream of the bending magnet. The scraper blade is fully extended so the tip is at the chamber center. With a transition absorber placed just upstream of the scraper blade, the photon beam width is 40mm at the scraper blade.

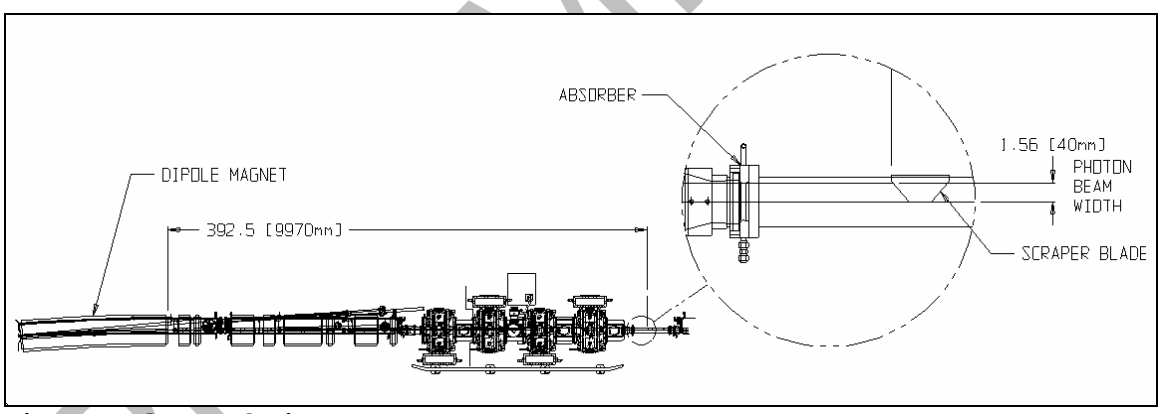

Figure 1: Sector 37 layout

At this distance at 300 mA the power density is:

$$P \cong 2342 e^{-2.598 y^2} W / mrad^2$$

The total power for a 40mm wide area is 1045 watts.

PRELIMINARY

Blade Configuration

This analysis is to serve as a reference for newer and more optimized blade configurations. The blade configuration is expected to change from the one presented here in which case a new analysis will need to be done.

Several scraper blade configurations of tungsten brazed to Glidcop were evaluated. High stresses at the braze joint became a trouble spot due to the large difference in the thermal expansion between Glidcop and tungsten. The thermal expansion of Glidcop is about four times higher than that of tungsten. A slit needed to be inserted between the thermal load and the tungsten to reduce the temperature rise at the braze joint.

Figure 2 shows the proposed geometry of the scraper blade. Note the 0.3 mm recess on the upper left portion of the front view Detail A. This is to ensure that after thermal expansion the Glidcop stays below the tungsten surface. The proposed scraper blade tip is made of tungsten alloy (95% W, 3.5% Ni, 1.5% Cu). The proposed scraper body is made of Glidcop Al-15.

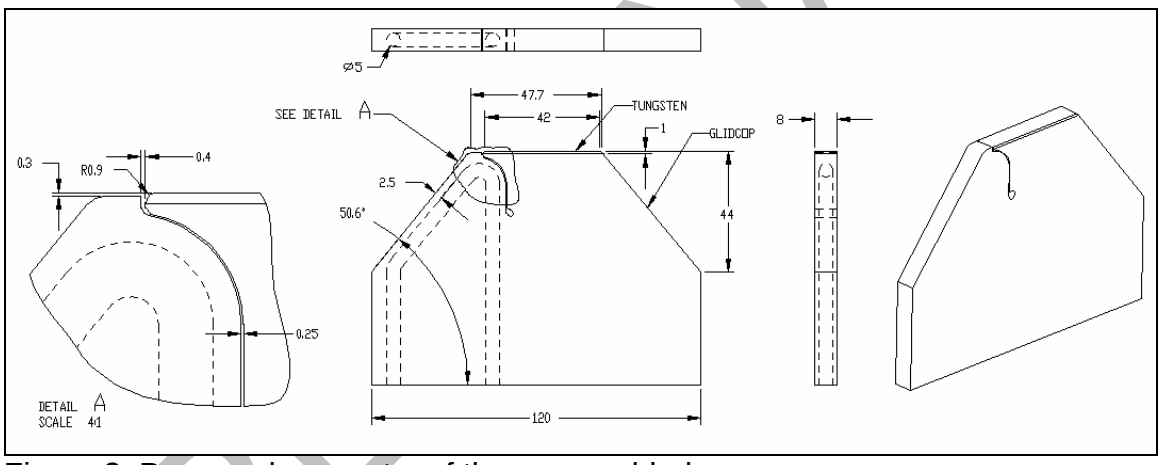

Figure 2: Proposed geometry of the scraper blade

PRELIMINARY

Material Properties

The tungsten alloy (95% W, 3.5% Ni, 1.5% Cu) is supplied by MiTech Metals in Indiana. The material is HD18. The material properties of HD18 and Glidcop Al-15 are given in table 1:

Table 1: Material Properties

Material	HD18	Glidcop Al-15	
Thermal Conductivity	0.138	0.343	W/mm-°C
Coefficient of thermal expansion	4.43E-06	0.171E-6	1/°C
Young's Modulus	310	122	GPa
Poisson's Ratio	0.125	0.326	
Yield Strength	586	297-352	MPa
Ultimate Tensile Strength	758	324-414	MPa
Melting Point	1400	1083	°C

Cooling Water Data

The cooling water data is given in table 2.

Table 2: Cooling Water Data

Material	Water	
Inlet Temperature	26.6	°C
Channel Diameter	5	mm
Flow rate	44.5	Ml/s
Velocity	2.2	m/s
Thermal Conductivity	0.611	W/m-°C
Prandtl Number	5.88	
Specific Heat	4.18	J/g-°C
Density	996.4	Kg/m^3
Convection Coefficient (Dittus-Boelter)	0.0113	W/mm^2-°C
Power	1045	W
Outlet Temperature	32.3	°C

Analysis

All analysis was done using Pro/Mechanica. Two cases are presented here. Case 1 is the beam centered on the scraper blade. Case 2 is the beam mis-steered 2.9 mm to one side of the scraper center. Case 2 is near the point of maximum temperature and near the point of maximum stress. In both cases the beam is 40 mm long extending from the scraper tip.

PRELIMINARY

Figure 3 Shows the temperature distribution, Von Mises stress distribution, and the deflection distribution of the scraper blade at 300 mA for case 1. The maximum Temperature is 183 °C and the maximum Von Mises stress is 202 MPa.

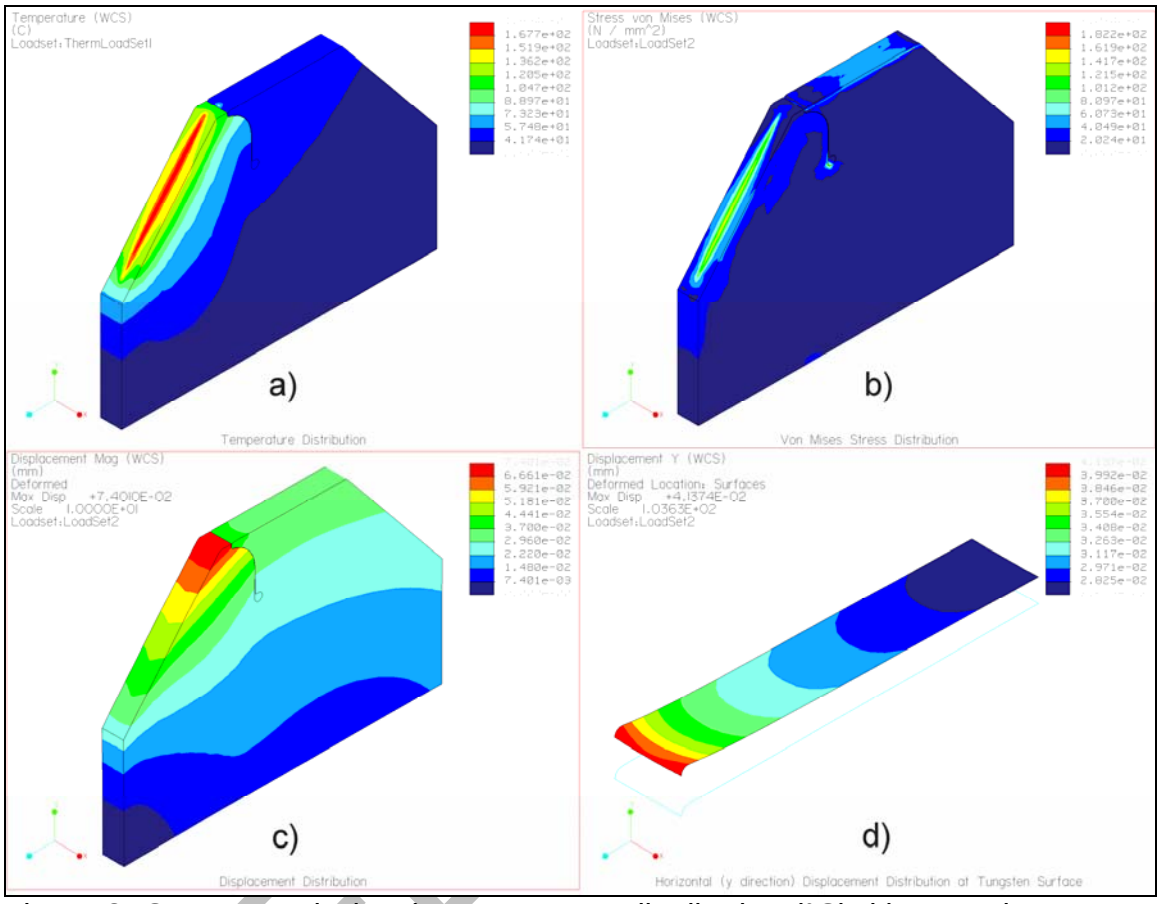

Figure 3: Case 1 Analysis. a) Temperature distribution (°C). b) Von Mises stress distribution (MPa=N/mm^2). c) Displacement distribution (mm). d) Horizontal displacement of the scraper tip (mm).

PREP

Figure 4 Shows the temperature distribution, Von Mises stress distribution, and the deflection distribution of the scraper blade at 300 mA for case 2. The maximum Temperature is 200 °C and the maximum Von Mises stress is 226 MPa.

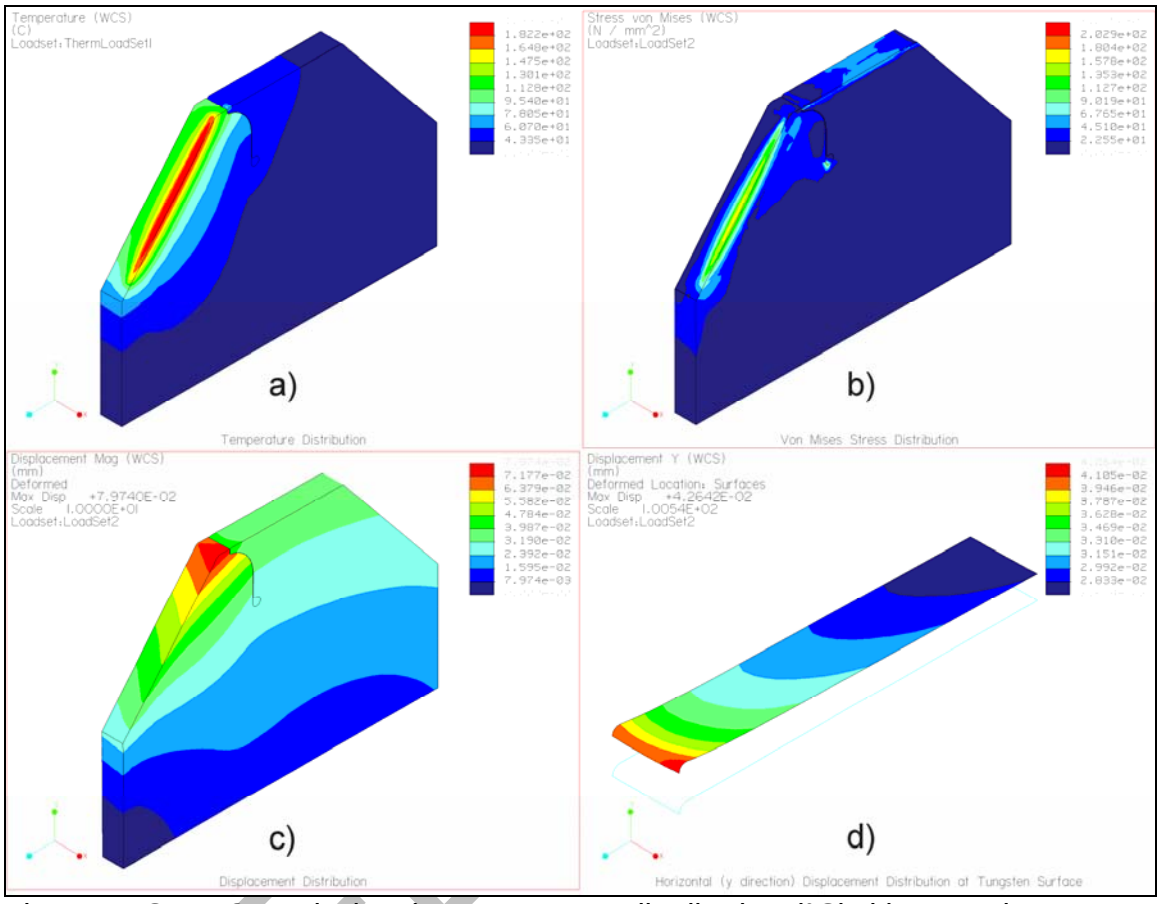

Figure 4: Case 2 Analysis. a) Temperature distribution (°C). b) Von Mises stress distribution (MPa=N/mm^2). c) Displacement distribution (mm). d) Horizontal displacement of the scraper tip (mm).

PREP

Figure 5 Shows the Von Mises stress distribution in the Glidcop and in the tungsten at 300 mA for case 2. The maximum Von Mises stress in the tungsten is 226 MPa. The maximum Von Mises stress in the Glidcop is 163 MPa.

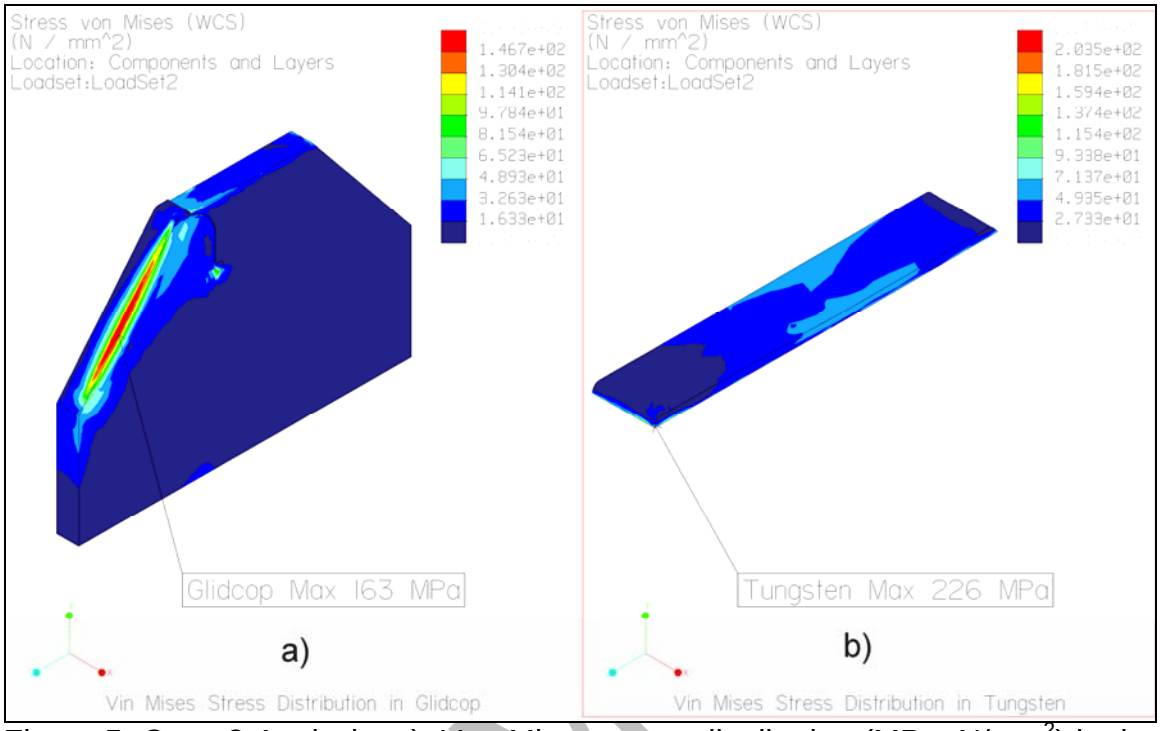

Figure 5: Case 2 Analysis. a) Von Mises stress distribution (MPa=N/mm^2) in the Glidcop. b) Von Mises stress distribution (MPa=N/mm^2) in the tungsten

Conclusion

The failure criteria:

1. Tmax cooling channel wall < 157 °C
2. Tmax Glidcop < 300 °C
3. Tmax tungsten HD18 < 420 °C
4. Maximum Von Mises stress in Glidcop < Glidcop Yield Stress
5. Maximum Von Mises stress in tungsten HD18 < tungsten HD18 Yield Stress

The maximum Von Mises stress, 226 MPa, occurs in the tungsten for case 2. This is less than half the material yield stress for HD18 tungsten. The maximum Von Mises stress in the Glidcop is 163 MPa for case 2. This is slightly above half the yield strength of Glidcop. The maximum temperature occurs in case 2 and is 200°C. The maximum cooling wall temperature is 141 °C in both case 1 and case 2. These results are within the failure criteria.

PRELIM

Comments

The 50.6° angle of the proposed scraper blade may be adjusted to improve wake-field effects and reduce RF heating. If the angle is made larger the blade length will decrease and the temperature and stresses will increase. This should be avoided. If the angle is made smaller the blade length will increase and the temperature and stresses will decrease. Care should be taken not to decrease the angle too much because this will make the blade longer which in turn makes the scraper housing longer.

PRELIMINARY