# *Thin Film*
# *Final Design Review*

***C. B. Reed, S. Sharma, V. Novick,***
***Y. Momozaki, A. Barcikowski, B. Rusthoven***

August 20, 2004

***Argonne National Laboratory***
*Operated by The University of Chicago*
*for the U.S. Department of Energy*

Office of Science
U.S. Department of Energy

# *Project Functional Requirements*

- **<u>Enable thin film R&D with various fluids</u>:**
  - Lithium
  - Water
  - Possibly others:
    - Ga
    - FC3283
- **<u>Argon pressure driven flow to</u>:**
  - Handle all above fluids
  - Eliminate need for pump
  - Pressure system to except 250 psi feed
  - Reservoir vessel to be ASTM certified for safety
  - Vessel capacity of 3 liters

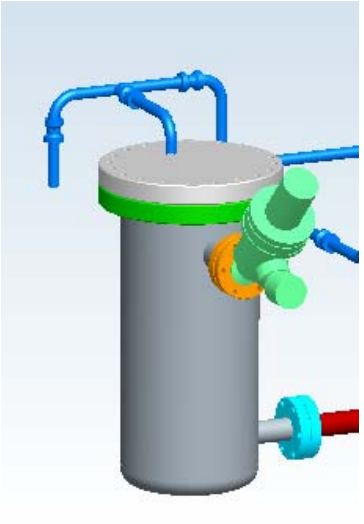

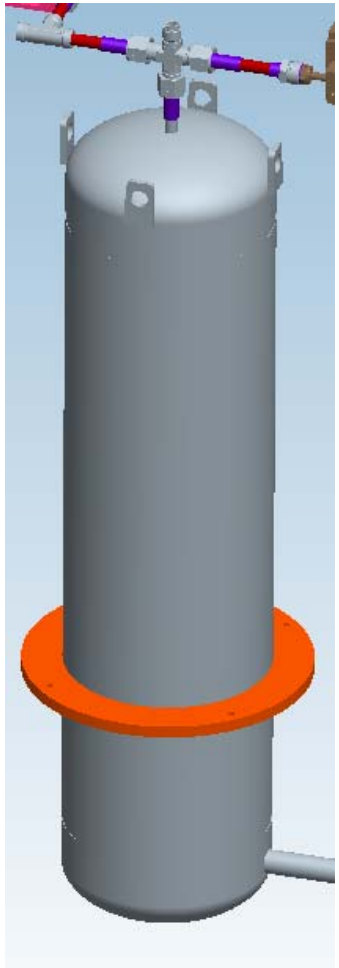

- Vessel pressure increased from 250 to 1000 psi.
- Reservoir size increased from 3 liters to 20 liters
  - From 6 x 12 To 8 x 28 to accommodate this

# *Project Functional Requirements*

- **<u>Test loop physical parameters</u>**
- Maximum vertical space = 96” currently 70” with 22” on lift table

- **Select radiant heaters to melt Li**
  - Maximum available power to a single zone
    - 30 amps at 208 volts
    - 30 amp zones available = 6
  - Maximum available power to a single zone
    - 50 amps at 208 volts
    - 50 amp zones available = 2
- **Heater Layout Design in Progress**

- **<u>Allow visual observation of film</u>**
  - Digital still & video cameras
  - Maximum view port height = 66”
  - Minimum view port height = 46”

  - 4 view ports available with adjustable height from 24 to 60 limited only by ceiling height.

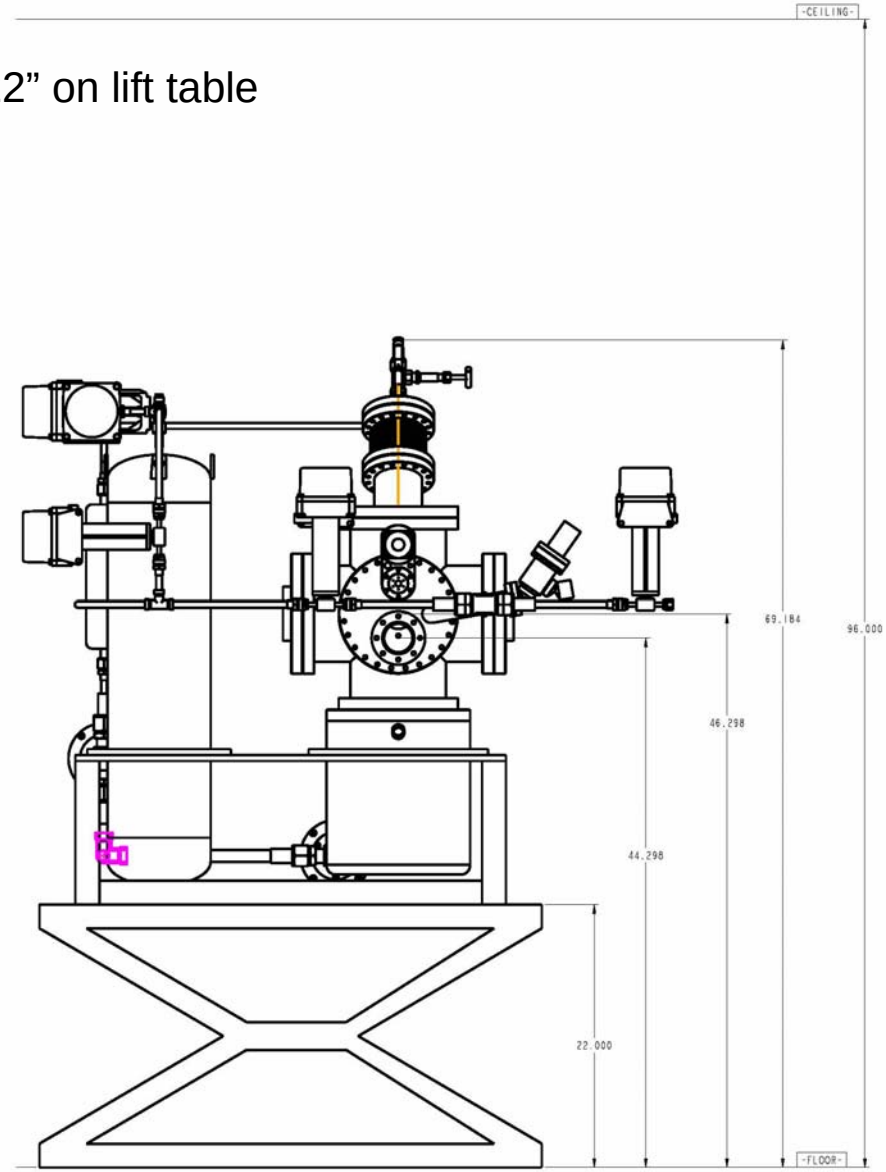

# *Project Functional Requirements*

- **Design exterior thermal shield to enclose the entire test loop**
- Thermal shield box must encompass all heaters but allow openings for view and beam ports
- Thermal shield box must allow openings for pneumatic and manual valve actuator access outside of the thermal shield
- Thermal shield box must allow openings for power leads and TC cables
- All pressure sensors and transducers to be located outside of Thermal shield box
- Maximum footprint = 30” X 30”

- **Main vacuum connection to pumping system to be a QF 50 connection**
  - Vacuum lines inside thermal shield must be Cajon or Conflat type for high temperature

- The thermal shield will be finalized after final piping of the system to allow for a proper thermal layout.
- The current footprint is 18 x 42 on the floor.
  - Overhanging valves and components widen layout to 55 x 52, this can be adjusted at time of installation to keep components from entering the heated zone.

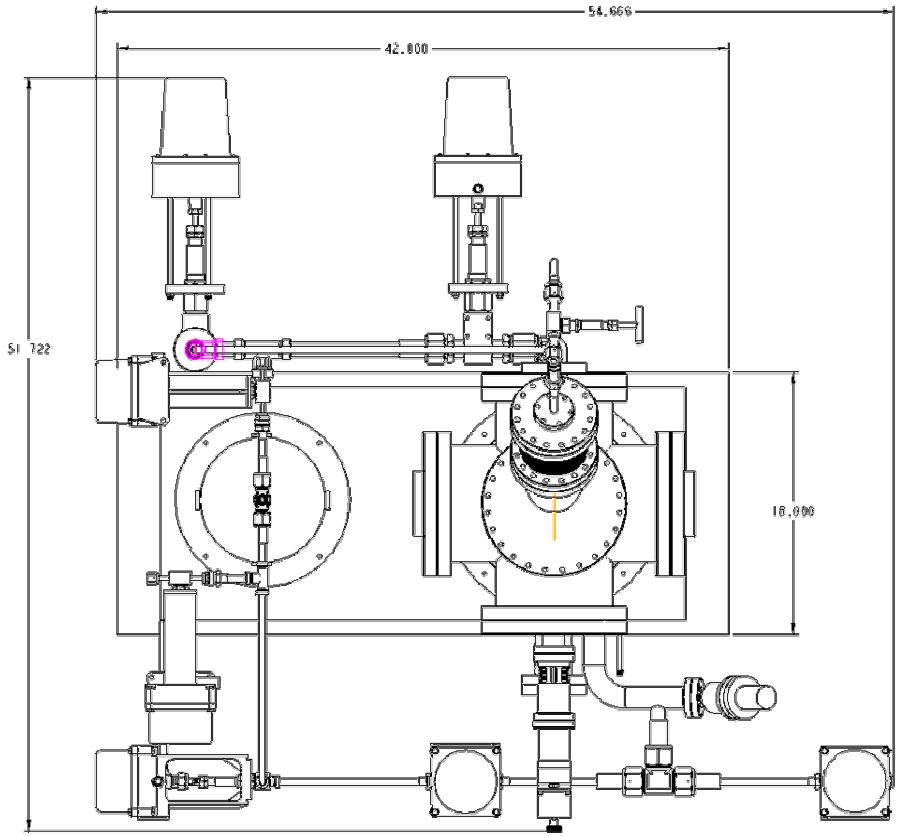

# *Project Functional Requirements*

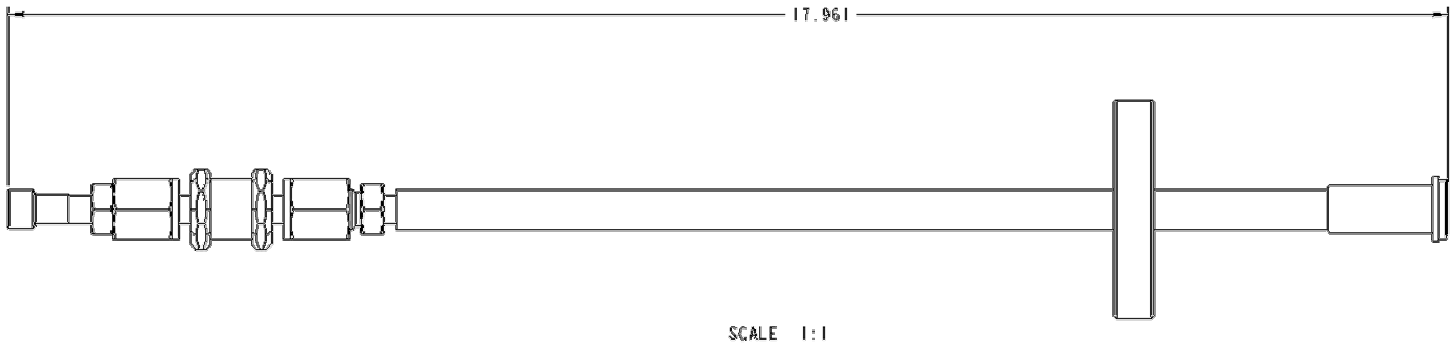


•**<u>Nozzle assembly:</u>**

•Nozzle easily removable (only performed at room temperature)

- •Removal of (1) CF flange and (1) VCR fitting
- •Maximum weight of removable components = 20 lb.
- •Weight of nozzle with filter = 1.58 lb.

•Minimize quantity of Li requiring disposal as part of nozzle change out

- •Minimize Li wetted surface area exposed to air during nozzle change operation
- •Lithium line valved to maintain purity during disassembly
- •Maximum cleanable component footprint = 18” X 10”
- •Maximum cleanable component height = 15”

•Allow course adjustment of impingement angle wrt plate +- TBDº

•At operating temperature:

- •Allow easy fine adjustment of impingement angle wrt plate +- 5º
- •Allow easy adjustment of distance between nozzle exit & impingement plate

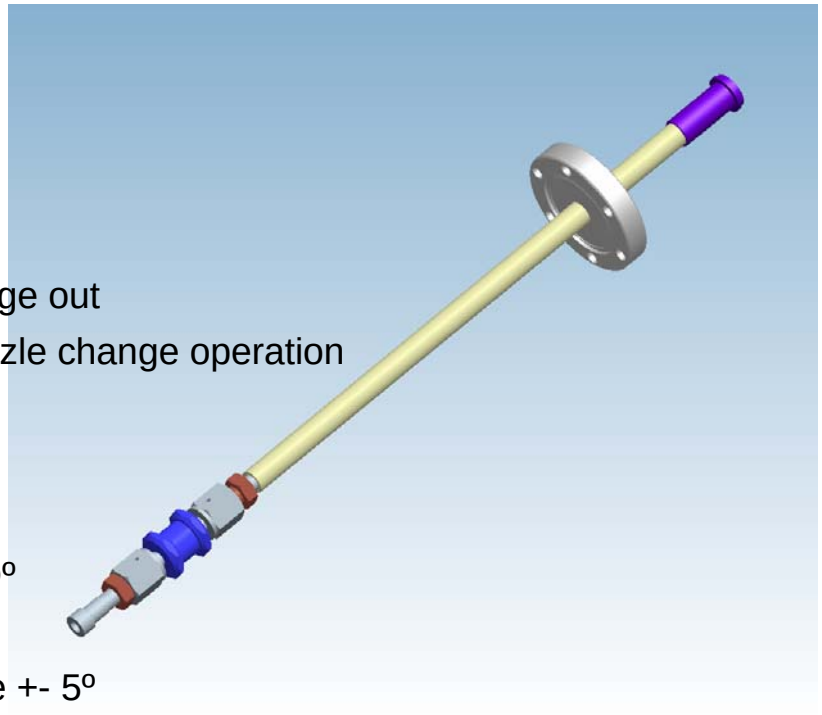

# *Project Functional Requirements*

- **Instrumentation:**
  - TCs
  - Sight glass for DP vs flow calibration (not used with Li)
  - Ruler or other measurement markings for film width determination
  - Gas pressure transducer
  - Vacuum gauges
  - Electron gun film thickness system (developmental)
- **Li purification**
  - Replace impure Li inventory with fresh Li
  - Install replaceable large surface area, 10 µm SS filter in pressure line

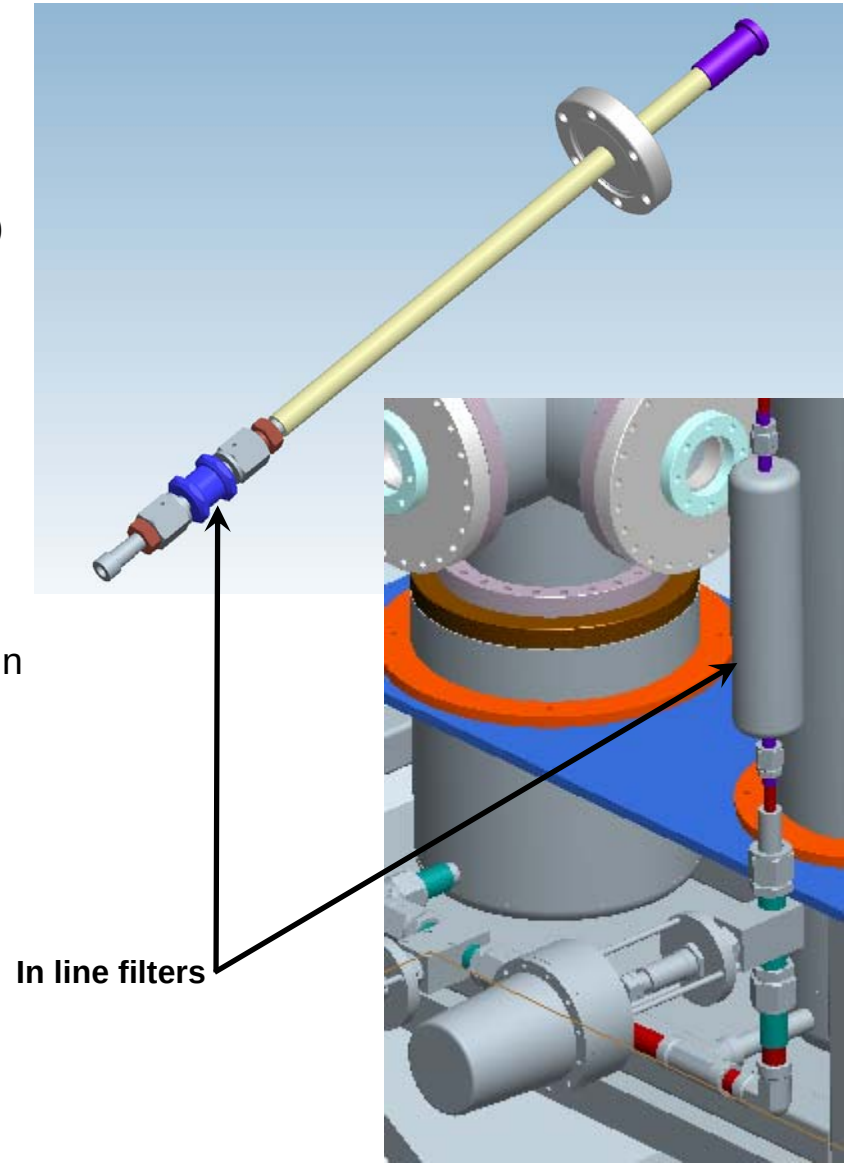

# *Project Functional Requirements*

- **Allow testing of rotating disk as a possible means of**
  - Increasing and controlling film speed
    - Motor driven rotation to be implemented later
  - Controlling film thickness

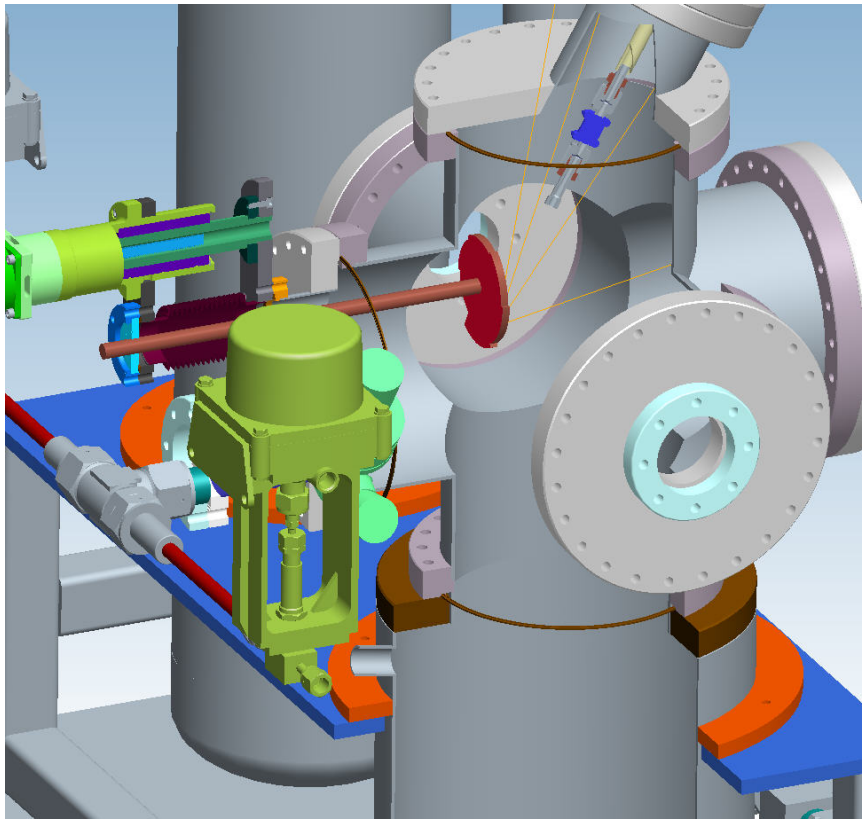

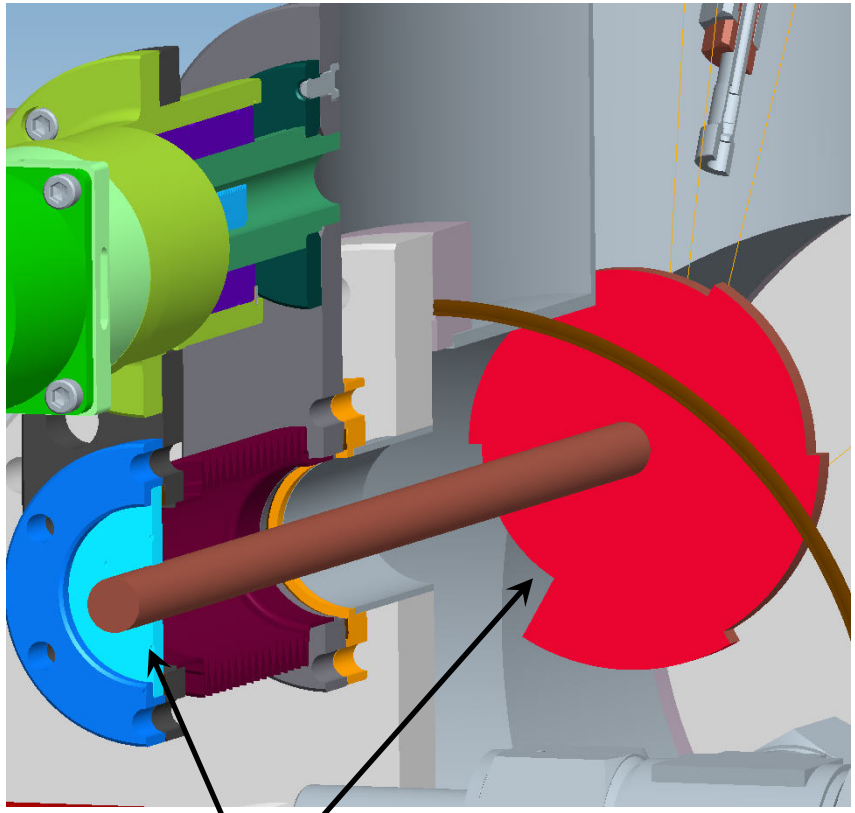

**Adjustable disc with increment indicators**

# *Project Summary*

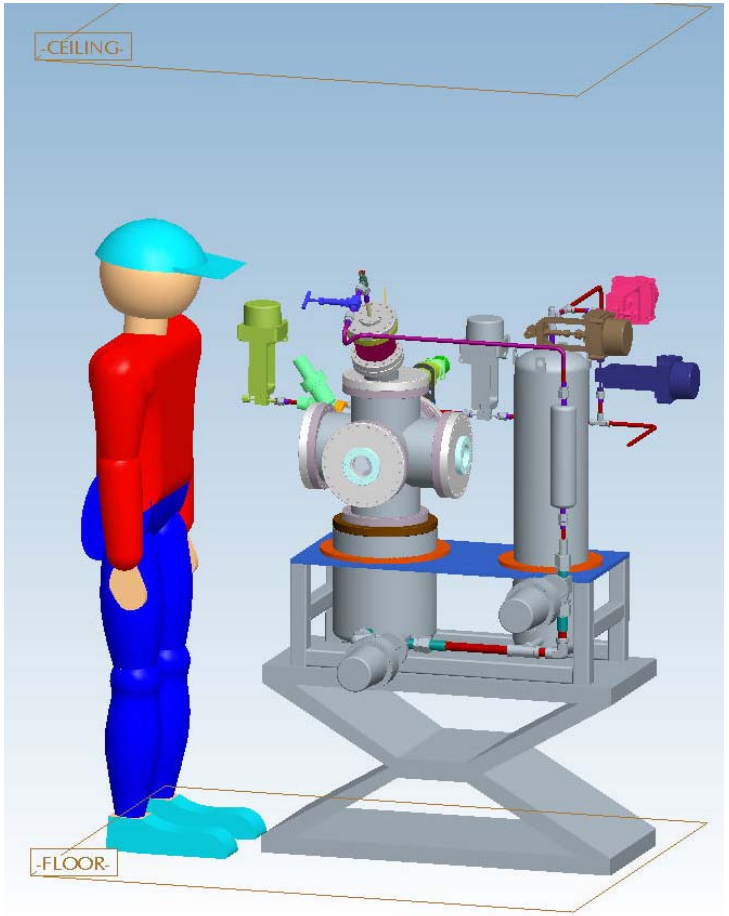


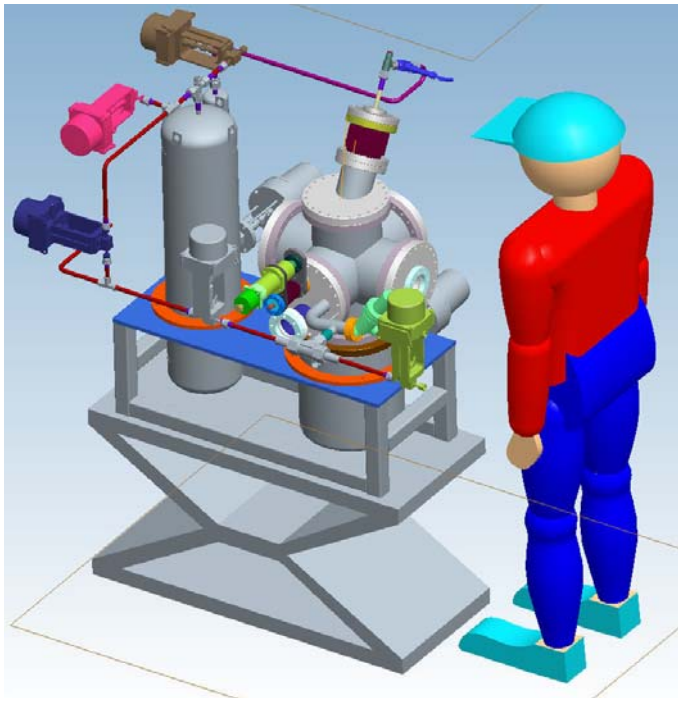

- **Vessel Sizes**
  - Reservoir: 8 x 28
  - Target Area: 8” 6-Way Cross
  - Collection Vessel: 12 x 12

- **Project Development Requirements**
  - Flow Pressure from 250 to 1000 psi.
  - Flow tubing from 1” to ½”
  - Spray angle – 30 +/-5
    - Revised to 30 +/-20
  - Filters added instead of replacing Li after impurities in flow
  - 1” Valves added to backflow system
    - Pneumatic actuators on all valves for safety

# *Project Layout*

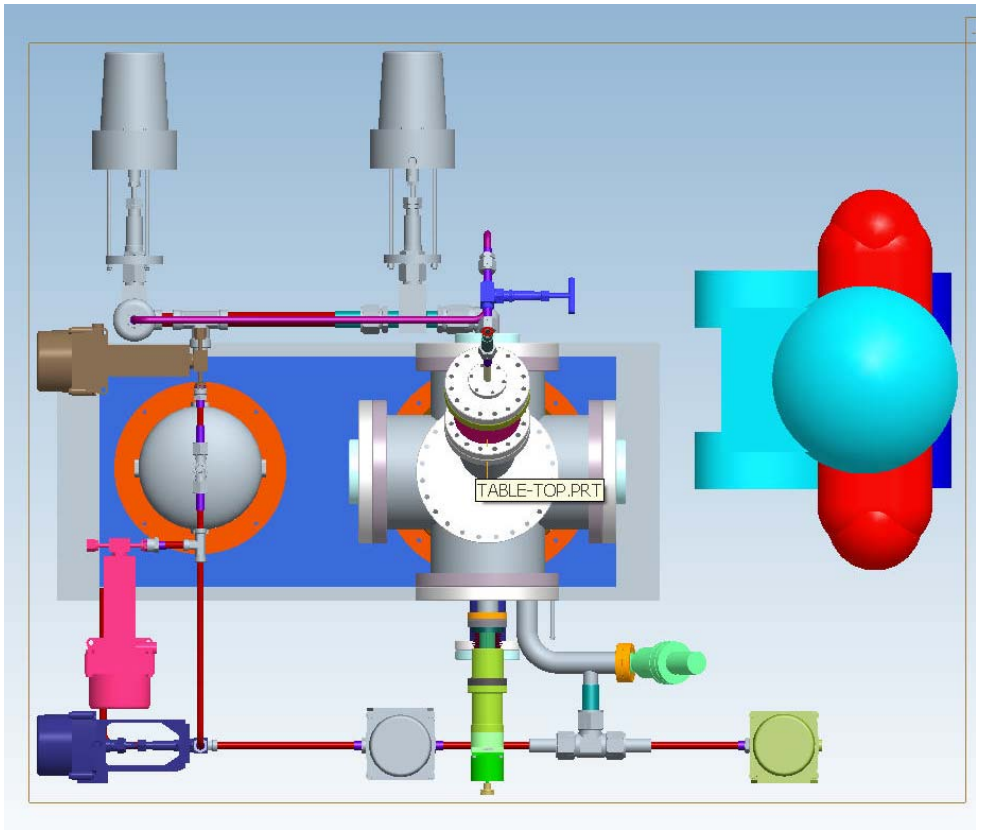


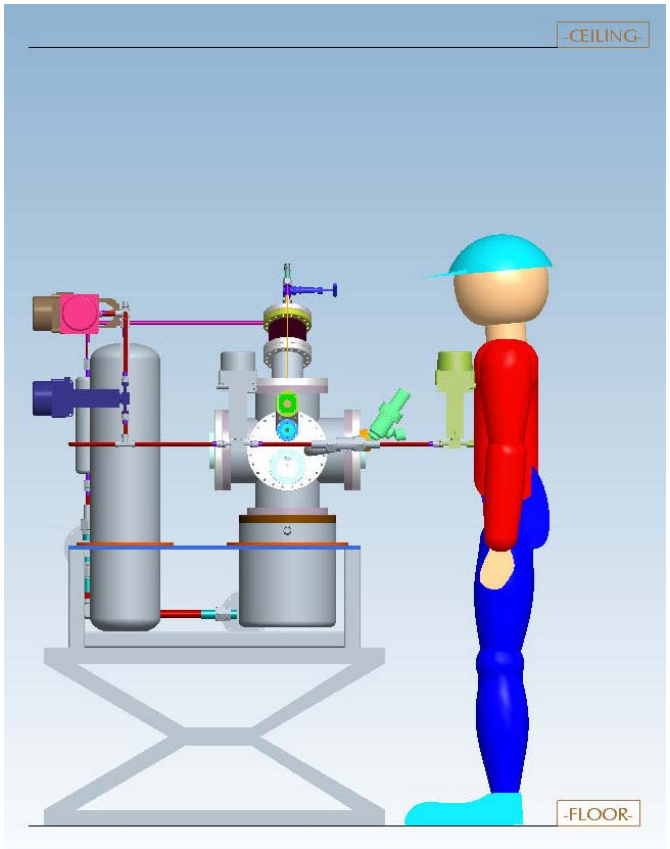

# Project Schedule

| ID | Task Name | Start | Finish | Cost | Model Number |
|---|---|---|---|---|---|
| 1 | **LITHIUM TARGET** | **Thu 7/1/04** | **Tue 9/28/04** | **$12,297.67** | |
| 2 | FINALIZE DESIGN | Thu 7/22/04 | Thu 8/19/04 | $0.00 | |
| 3 | PURCHASE PARTS | **Thu 7/1/04** | **Fri 9/3/04** | **$12,297.67** | |
| 4 | WATER VESSEL | Thu 7/22/04 | Thu 7/22/04 | $437.10 | 304L-HDF8-1GAL |
| 5 | LIFT TABLE | Mon 8/23/04 | Fri 9/3/04 | $2,179.17 | 2900T11 |
| 6 | LINEAR TABLES | Mon 7/26/04 | Mon 7/26/04 | $1,000.00 | DAEDAL 446L |
| 7 | PIPE FITTINGS | Mon 8/23/04 | Fri 9/3/04 | $0.00 | |
| 8 | VALVES | **Thu 7/1/04** | **Fri 7/16/04** | **$8,681.40** | |
| 9 | VACUUM VALVES | Thu 7/1/04 | Thu 7/1/04 | $0.00 | |
| 10 | **FLOW VALVES** | **Thu 7/1/04** | **Fri 7/16/04** | **$8,681.40** | |
| 11 | 1/2" BELLOWS VALVE | Thu 7/1/04 | Fri 7/16/04 | $4,790.40 | SS-8UW-V47-8C |
| 12 | 1" BELLOWS VALVE | Thu 7/1/04 | Wed 7/7/04 | $3,891.00 | SS-12UW-V429-8C |
| 13 | PRESSURE VALVES | Thu 7/1/04 | Thu 7/1/04 | $0.00 | |
| 14 | **FABRICATION** | **Fri 8/20/04** | **Tue 9/28/04** | **$0.00** | |
| 15 | VESSELS | **Fri 8/20/04** | **Fri 9/24/04** | **$0.00** | |
| 16 | LITHIUM RESERVOIR | Fri 8/20/04 | Fri 9/24/04 | $0.00 | |
| 17 | PRESSURE RESERVOIR | Fri 8/20/04 | Fri 9/24/04 | $0.00 | |
| 18 | INJECTION CHAMBER | Fri 8/20/04 | Fri 9/24/04 | $0.00 | |
| 19 | PIPING | **Fri 8/20/04** | **Fri 9/17/04** | **$0.00** | |
| 20 | VCR FITTINGS | Fri 8/20/04 | Fri 8/20/04 | $0.00 | |
| 21 | GENERAL PIPE | Fri 8/20/04 | Fri 9/17/04 | $0.00 | |
| 22 | SUPPORT TABLE | Fri 8/20/04 | Tue 9/28/04 | $0.00 | |

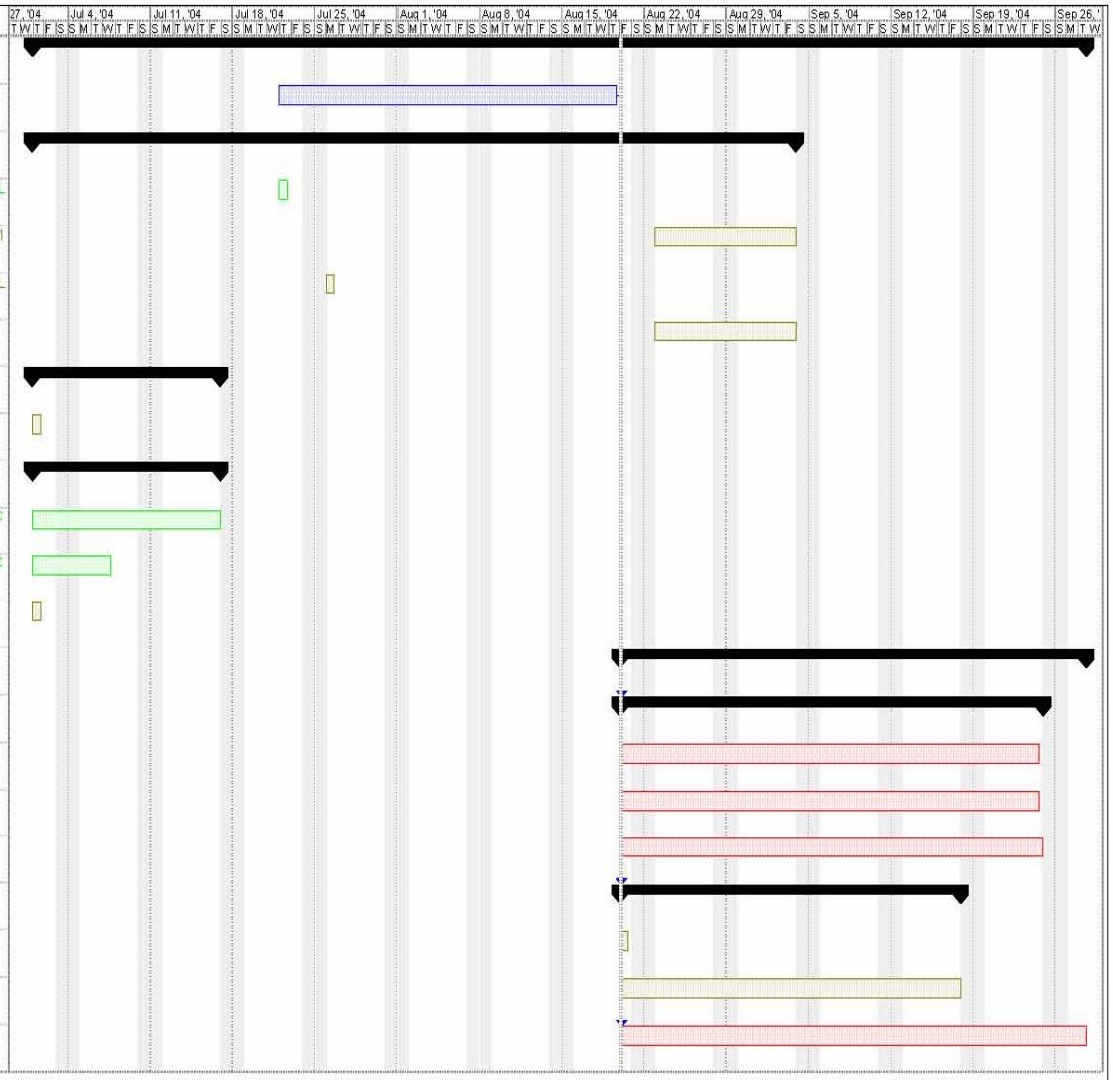


- Green – In-hand
- Blue – Fabricated in CS
- Red – Fabricated by outside Vendor
- Brown – Purchased through Paris
- Yellow – Purchased through AMOS
- Gray – On-site Stock