REVISIONS					
ZONE	REV.	DESCRIPTION	BY	APPROVED	DATE

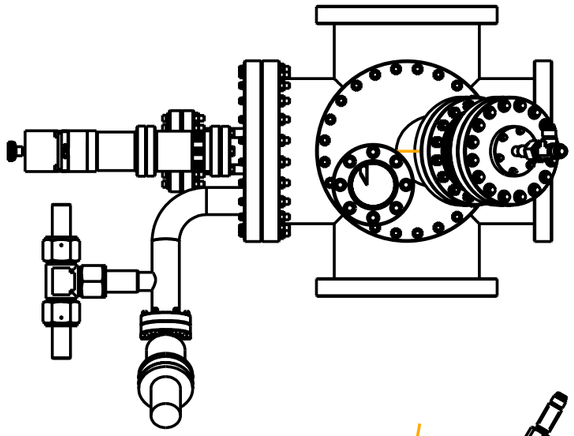

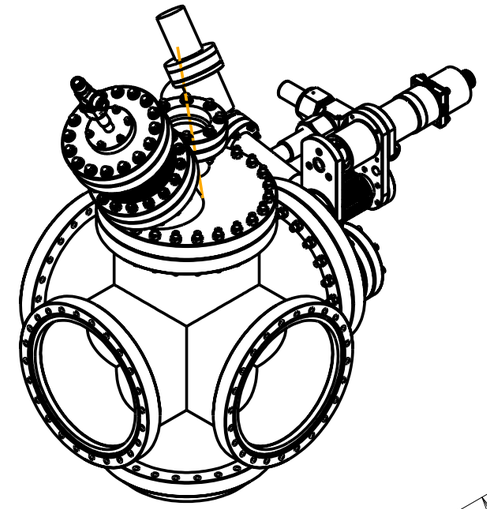

SCALE 0.250

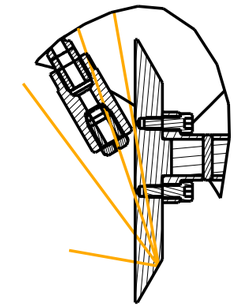

DETAIL B
SCALE 1.000

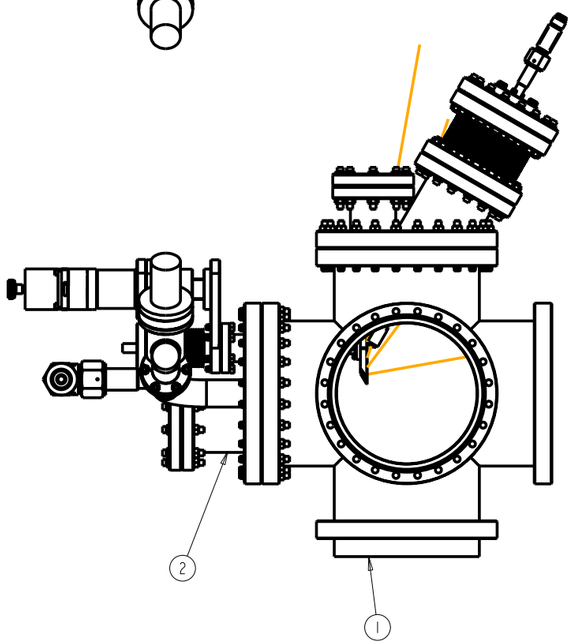

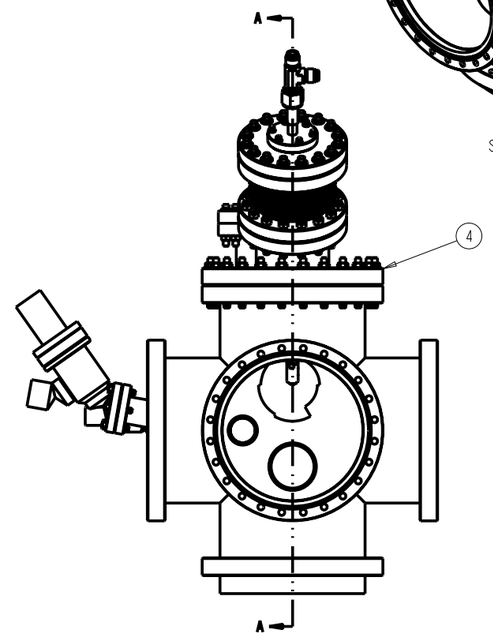

SCALE 0.250

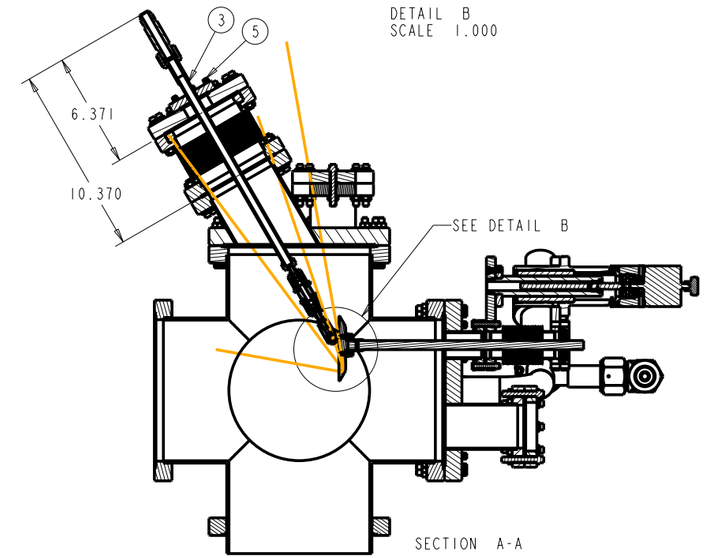

SECTION A-A

ITEM	DRAWING/PART NUMBER	NOMENCLATURE OR DESCRIPTION	MATERIAL/SPEC	QTY
7	91845A115	5/16-24 HEX NUT	18-8 SST	24
6	190048	5/16-24 12 POINT BOLT	304 SST	24
5	190057	1/4-28X 7/8 12 POINT BOLT	304 SST	6
4	G13678	NOZZLE PORT ASSEMBLY	SEE PARTS LIST	1
3	G13675	NOZZLE ASSEMBLY	SEE PARTS LIST	1
2	G13680	TARGET FLANGE ASSEMBLY	SEE PARTS LIST	1
1	G13667	6-WAY CROSS WITH EXTENSION	SEE PARTS LIST	1

PARTS LIST/BILL OF MATERIALS

1 SOURCE OR EQUIVALENT
MDC VACUUM PRODUCTS, INC.
23842 CABOT BOULEVARD
HAYWARD, CA. 94545-1651
(510) 265-3500
www.mdc-vacuum.com

2 SOURCE OR EQUIVALENT
McMASTER CARR
P.O. BOX 4355
CHICAGO, IL 60680-4355
(630) 833-0300
www.mcmaster.com

NOTE:

1 THE USE OF SULPHUR BEARING OILS OR ABRASIVES IS PROHIBITED.

2 PROCESSES SUCH AS GRINDING, AND OR POLISHING THAT MAY RESULT IN EMBEDDED CONTAMINATION OF THE PART ARE PROHIBITED.

3 USE ONLY CIMCOOL, KOOLMIST #77, MOBIL CUT-MAX, MISSILE LUBE #5, OR AN ANL APPROVED EQUAL LUBRICANT FOR MACHINING.

4 PRIOR TO SHIPPING ALL SURFACES OF THE PART ARE TO BE THOROUGHLY CLEANED, AND FREE OF ALL OIL AND OR SOLUTIONS.

UNLESS OTHERWISE SPECIFIED ALL DIMENSIONS ARE IN INCHES TOLERANCES
DECIMALS: X ±.1; .XX ±.01; .XXX ±.005
ANGULAR ±.5°
SURFACE ROUGHNESS
REMOVE ALL BURRS AND BREAK SHARP EDGES .03 MAX. SURFACE TEXTURE TO BE IN ACCORDANCE WITH LATEST ANSI B46.1
DIMENSIONING & TOLERANCING IN ACCORDANCE WITH LATEST ANSI Y14.5

MODEL NAME: LITHIUM_TARGET_ASSY
ELECTRONIC FILE NAME: G13662

DRAWN BY: B. RUSTHOVEN — DATE: 15-Sep-04
CHECKED BY: — DATE:
DESIGNED BY: B. RUSTHOVEN — DATE: 15-Sep-04
RESPONSIBLE ENGINEER: S. SHARMA — DATE:
GROUP LEADER: S. SHARMA — DATE:
APPROVED BY: — DATE:
RELEASE LEVEL: - — VERSION: -
MATERIAL: SEE PARTS LIST

THIS DRAWING IS THE PROPERTY OF
ARGONNE NATIONAL LABORATORY
RARE ISOTOPE ACCELERATOR

TITLE:
RARE ISOTOPE ACCELERATOR
THIN LITHIUM FILM
TARGET VESSEL ASSEMBLY

SIZE: D — FSCM No: 0HRH5 — DRAWING NUMBER: G13662 — REV.: 00
SCALE: 0.250 — DO NOT SCALE DRAWING — SHEET 1 OF 1