REVISIONS					
ZONE	REV.	DESCRIPTION	BY	APPROVED	DATE

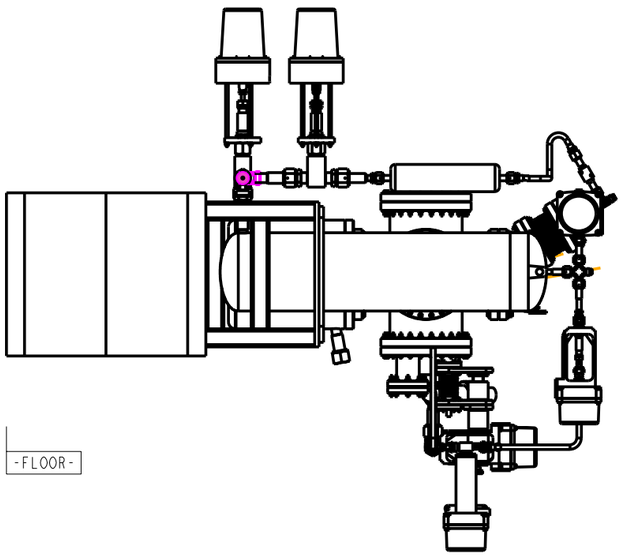

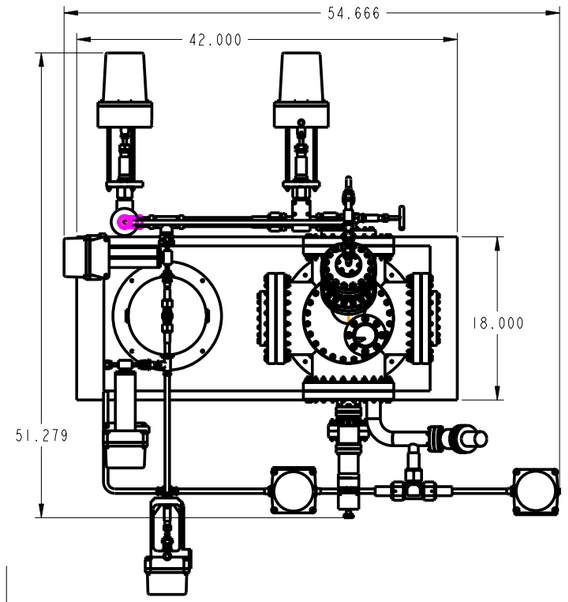

SCALE 1:8

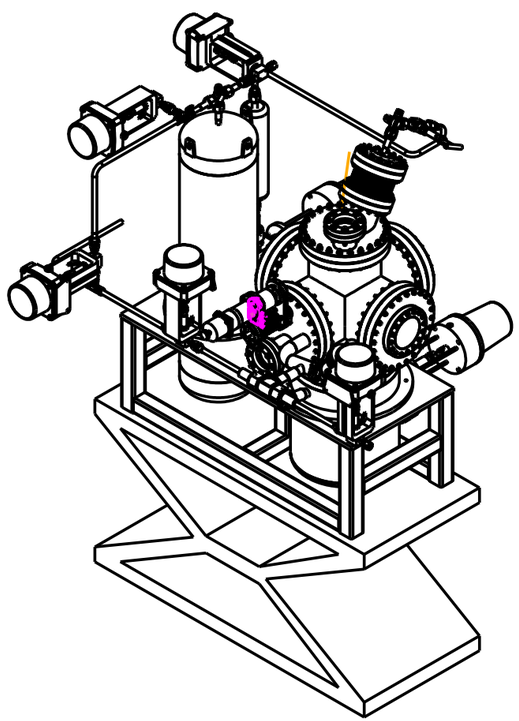

SCALE 1:8

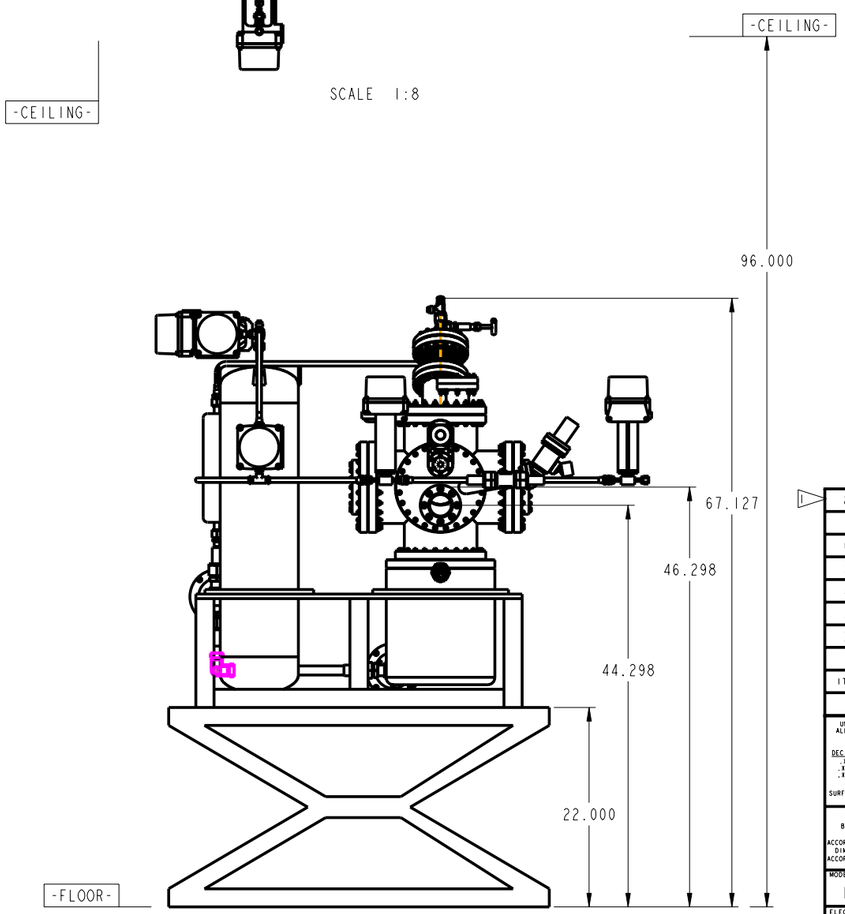

SOURCE OR EQUIVALENT
McMASTER CARR
P.O. BOX 4355
CHICAGO, IL 60680-4355
(630) 833-0300
www.mcmaster.com

ITEM	DRAWING/PART NUMBER	NOMENCLATURE OR DESCRIPTION	MATERIAL/SPEC	QTY
8	2900T131	5000# ELECTRIC LIFT TABLE	SEE PARTS LIST	1
7	G13669	TARGET VESSEL FEED LINE	SEE PARTS LIST	1
6	G13668	SUPPORT TABLE	SEE PARTS LIST	1
5	G13666	COLLECTION VESSEL	SEE PARTS LIST	1
4	G13665	RESERVOIR VESSEL WELDMENT	SEE PARTS LIST	1
3	G13664	RESERVOIR VESSEL FEED LINE	SEE PARTS LIST	1
2	G13663	LITHIUM FEED LINE	SEE PARTS LIST	1
1	G13662	TARGET VESSEL ASSEMBLY	SEE PARTS LIST	1

PARTS LIST/BILL OF MATERIALS

UNLESS OTHERWISE SPECIFIED ALL DIMENSIONS ARE IN INCHES
TOLERANCES
DECIMALS .X ±.1 .XX ±.01 .XXX ±.005
ANGULAR ±.5°
SURFACE ROUGHNESS

REMOVE ALL BURRS AND BREAK SHARP EDGES .03 MAX. SURFACE TEXTURE TO BE IN ACCORDANCE WITH LATEST ANSI B46.1
DIMENSIONING & TOLERANCING IN ACCORDANCE WITH LATEST ANSI Y14.5

MODEL NAME: FULL-LAYOUT

ELECTRONIC FILE NAME: G13661

DRAWN BY: B. RUSTHOVEN	DATE 20-Sep-04		
CHECKED BY:	DATE		
DESIGNED BY: B. RUSTHOVEN	DATE 20-Sep-04		
RESPONSIBLE ENGINEER: S. SHARMA	DATE		
GROUP LEADER: S. SHARMA	DATE		
APPROVED BY:	DATE		
RELEASE LEVEL: -	VERSION: -		
MATERIAL: SEE PARTS LIST			

THIS DRAWING IS THE PROPERTY OF
ARGONNE NATIONAL LABORATORY
RARE ISOTOPE ACCELERATOR

TITLE:
RARE ISOTOPE ACCELERATOR
THIN LITHIUM FILM
FULL ASSEMBLY

SIZE	FSCM No	DRAWING NUMBER:	REV.
D	0HRH5	G13661	00
SCALE: 9:160	DO NOT SCALE DRAWING	SHEET 1 OF 2	