REVISIONS					
ZONE	REV.	DESCRIPTION	BY	APPROVED	DATE

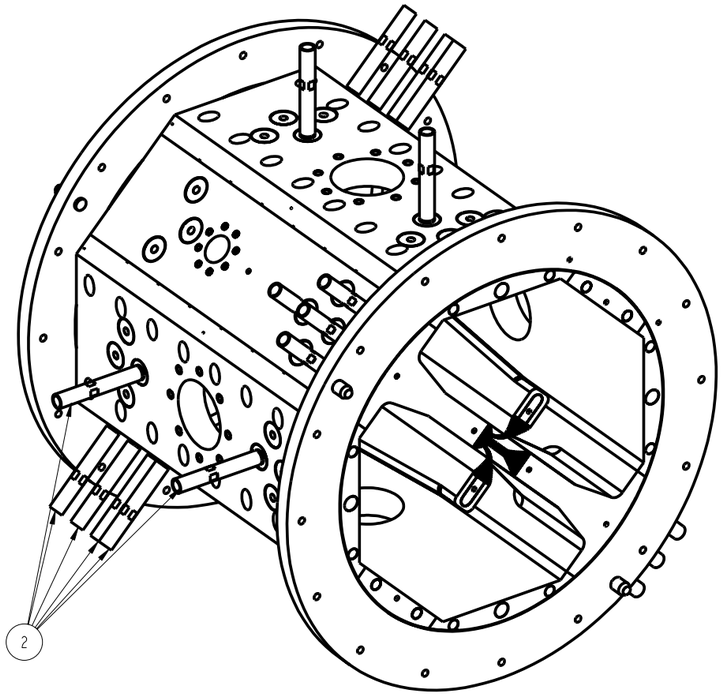

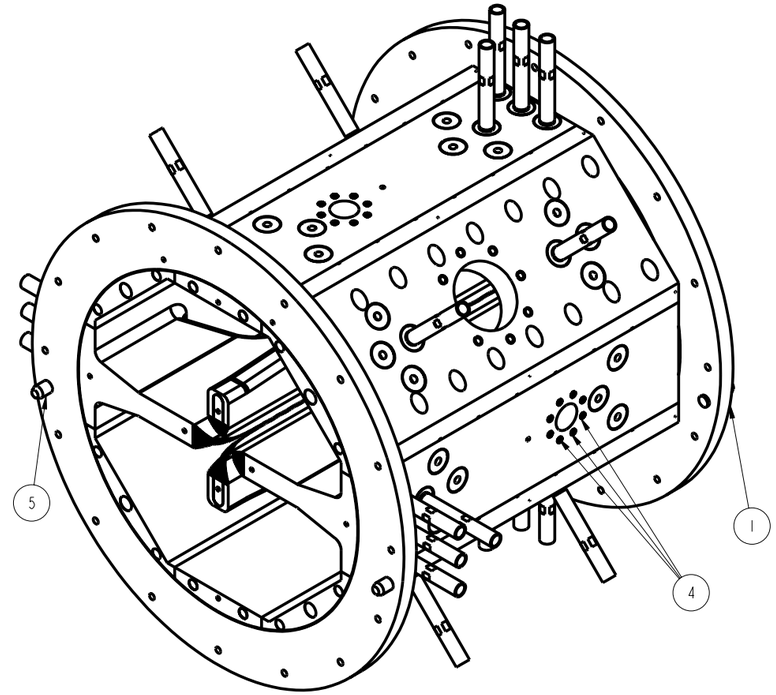

SCALE 1:4

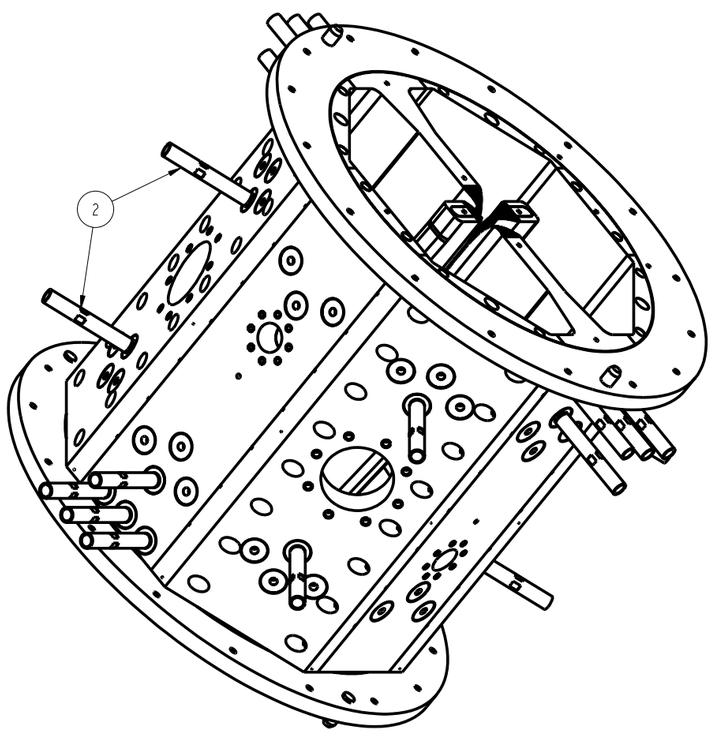

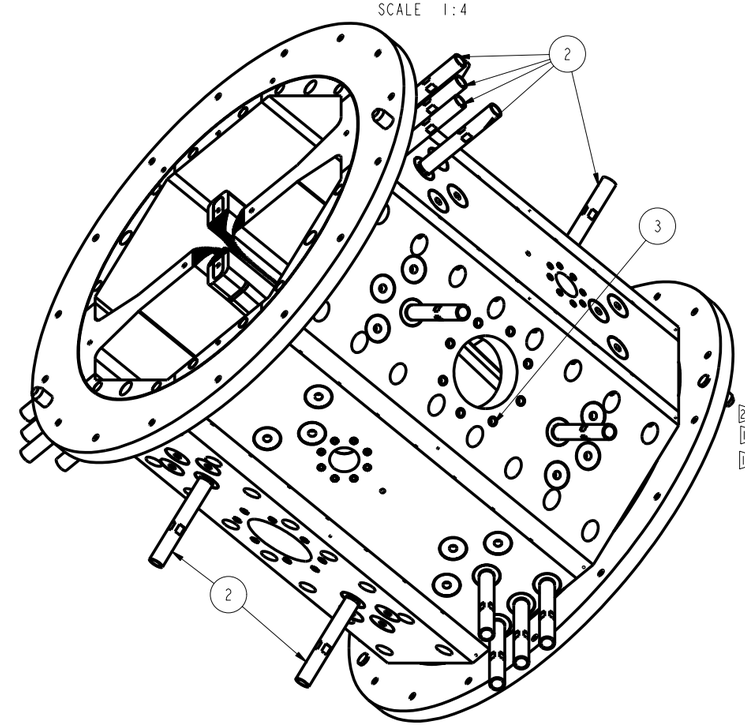

CLEANING PROCEDURES

1. CLEAN THE COMPONENTS FIRST WITH ACETONE THEN USE AN ALCOHOL RINSE, DRYING PARTS WITH CLEAN SHOP RAGS. THEN IMMERSE THE PARTS IN A CLEAN DE-IONIZED WATER AND 3-5% CITRANOX SOLUTION IN AN ULTRASONIC TANK AT 90-110 F FOR 15 MINUTES.

2. BLOW-DRY THE PARTS WITH CLEAN DRY NITROGEN. PLACE ALCOHOL IN THE DRILLED HOLES OF THE PLATE AND VANE AND BLOW DRY WITH DRY NITROGEN.

NOTE:

1 PRIOR TO SHIPPING ALL SURFACES OF THE PART ARE TO BE THOROUGHLY CLEANED, AND FREE OF ALL OIL AND OR SOLUTIONS.

2 PIPE INSTALLATION TO BE WATER TIGHT & TESTED PER E ASTM 1003-84 @ 250 P.S.I..

1 SOURCE OR EQUIVALENT
CARR LANE MANUFACTURING CO.
4200 CARR LANE CT.
ST. LOUIS, MO 63119-7910
(314) 647-6200
www.carrlane.com

2 SOURCE OR EQUIVALENT
McMASTER CARR
P.O. BOX 4355
CHICAGO, IL 60680-4355
(630) 833-0300
www.mcmaster.com

WEIGHT: 1304 lbs.

ITEM	DRAWING/PART NUMBER	NOMENCLATURE OR DESCRIPTION	MATERIAL/SPEC	QTY
5	8472A18	LOCATING PIN	STL	4
4	CL-1420-TSKS	1/4-20 KEY INSERT	303 SST	32
3	CL-3816-TSKS	3/8-16 KEY INSERT	303 SST	32
2	G12840-1	WATER TUBE	SEE PARTS LIST	24
1	G12826	SEGMENT FINAL MACHINING	SEE PARTS LIST	1

PARTS LIST/BILL OF MATERIALS

UNLESS OTHERWISE SPECIFIED ALL DIMENSIONS ARE IN INCHES
TOLERANCES
DECIMALS .X ±.1 .XX ±.01 .XXX ±.005
ANGULAR ±.5°
SURFACE ROUGHNESS

REMOVE ALL BURRS AND BREAK SHARP EDGES .03 MAX. SURFACE TEXTURE TO BE IN ACCORDANCE WITH LATEST ANSI B46.1 DIMENSIONING & TOLERANCING IN ACCORDANCE WITH LATEST ANSI Y14.5

MODEL NAME: G13431-WATER-TUBE-ASSEMBLY

ELECTRONIC FILE NAME: G13431

DRAWN BY: B. RUSTHOVEN	DATE 19-Nov-03	
CHECKED BY:	DATE	
DESIGNED BY: B. RUSTHOVEN	DATE 19-Nov-03	
RESPONSIBLE ENGINEER: S. SHARMA	DATE	
GROUP LEADER: S. SHARMA	DATE	
APPROVED BY:	DATE	
RELEASE LEVEL: -	VERSION: -	
MATERIAL: SEE PARTS LIST		

THIS DRAWING IS THE PROPERTY OF
ARGONNE NATIONAL LABORATORY
RARE ISOTOPE ACCELERATOR

TITLE:
RARE ISOTOPE ACCELERATOR
CONCEPTUAL DESIGN
57 MHZ RFQ STRUCTURE
WATER TUBE INSTALLATION ASSEMBLY

SIZE D | FSCM No 0HRH5 | DRAWING NUMBER: G13431 | REV. 00

SCALE: 1:4 | DO NOT SCALE DRAWING | SHEET 1 OF 1