REVISIONS					
ZONE	REV.	DESCRIPTION	BY	APPROVED	DATE

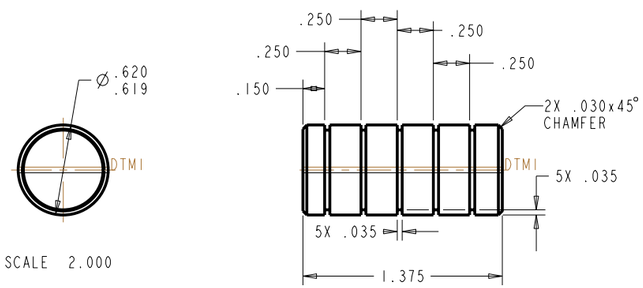

1 PLUG

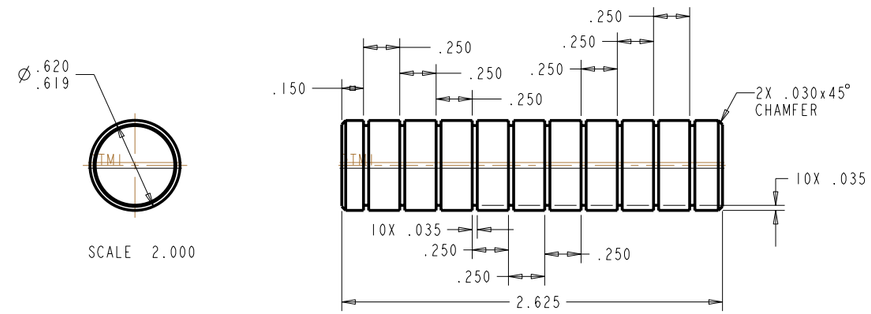

2 PLUG

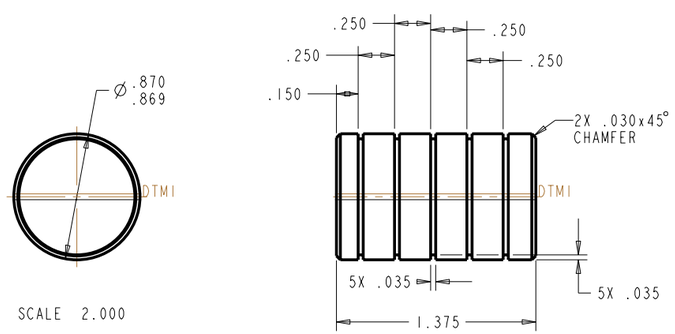

3 PLUG

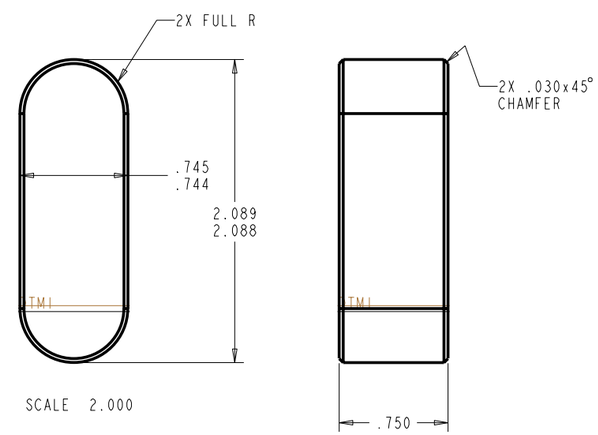

4 PLUG

NOTE:

1 THE USE OF SULPHUR BEARING OILS OR ABRASIVES IS PROHIBITED.

2 PROCESSES SUCH AS GRINDING, AND OR POLISHING THAT MAY RESULT IN EMBEDDED CONTAMINATION OF THE PART ARE PROHIBITED.

3 USE ONLY CIMCOOL, KOOLMIST #77, MOBIL CUT-MAX, MISSILE LUBE #5, OR AN ANL APPROVED EQUAL LUBRICANT FOR MACHINING.

4 PRIOR TO SHIPPING ALL SURFACES OF THE PART ARE TO BE THOROUGHLY CLEANED, AND FREE OF ALL OIL AND OR SOLUTIONS.

5 ALL PLUGS TO BE CUT FROM PLATE. CUTTING MUST BE DONE ACROSS THE GRAIN STRUCTURE OF THE MATERIAL.

ITEM	DRAWING/PART NUMBER	NOMENCLATURE OR DESCRIPTION	MATERIAL/SPEC	QTY

PARTS LIST/BILL OF MATERIALS

UNLESS OTHERWISE SPECIFIED ALL DIMENSIONS ARE IN INCHES TOLERANCES
DECIMALS: .X ±.1; .XX ±.01; .XXX ±.005
ANGULAR ±.5°
SURFACE ROUGHNESS
REMOVE ALL BURRS AND BREAK SHARP EDGES .03 MAX. SURFACE TEXTURE TO BE IN ACCORDANCE WITH LATEST ANSI B46.1
DIMENSIONING & TOLERANCING IN ACCORDANCE WITH LATEST ANSI Y14.5

MODEL NAME: BRAZE_PLUG_RACETRACK
ELECTRONIC FILE NAME: G12839

DRAWN BY: B. RUSTHOVEN — DATE: 16-Jun-03
CHECKED BY: — DATE:
DESIGNED BY: B. RUSTHOVEN — DATE: 16-Jun-03
RESPONSIBLE ENGINEER: S. SHARMA — DATE:
GROUP LEADER: S. SHARMA — DATE:
APPROVED BY: D. SCHRAGE — DATE:
RELEASE LEVEL: - — VERSION: -
MATERIAL: OFE COPPER F68-99 CLASS 2 OR BETTER

THIS DRAWING IS THE PROPERTY OF
ARGONNE NATIONAL LABORATORY
RARE ISOTOPE ACCELERATOR

TITLE:
RARE ISOTOPE ACCELERATOR
CONCEPTUAL DESIGN
57 MHZ RFQ STRUCTURE
PLUG DETAILS

SIZE: D — FSCM No: 0HRH5 — DRAWING NUMBER: G12839 — REV: 00
SCALE: 2.000 — DO NOT SCALE DRAWING — SHEET 1 OF 1