REVISIONS					
ZONE	REV.	DESCRIPTION	BY	APPROVED	DATE

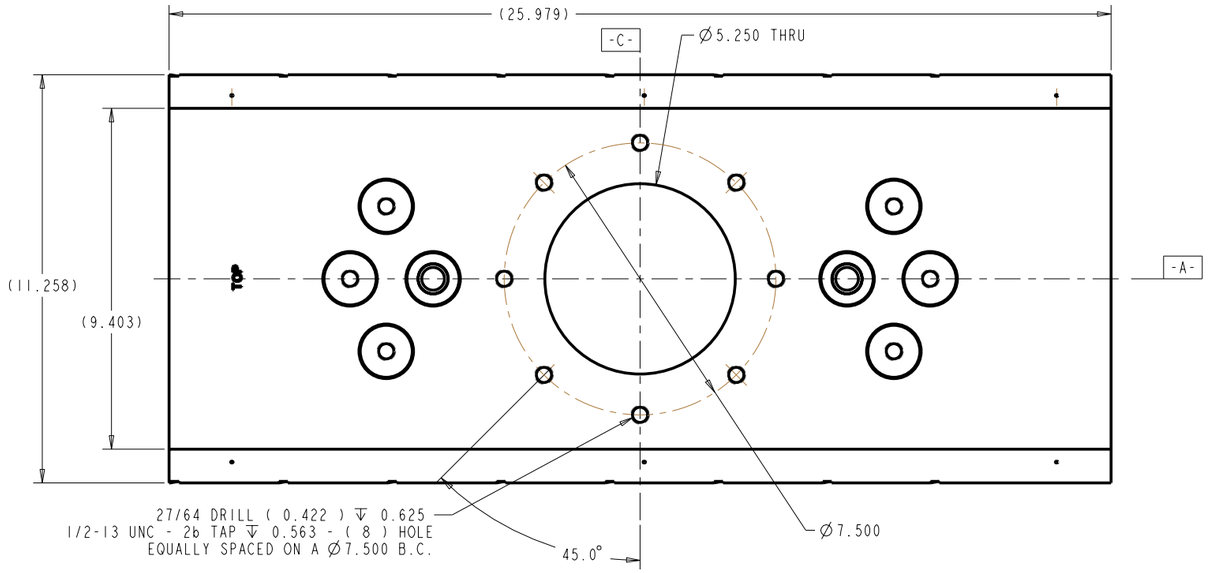

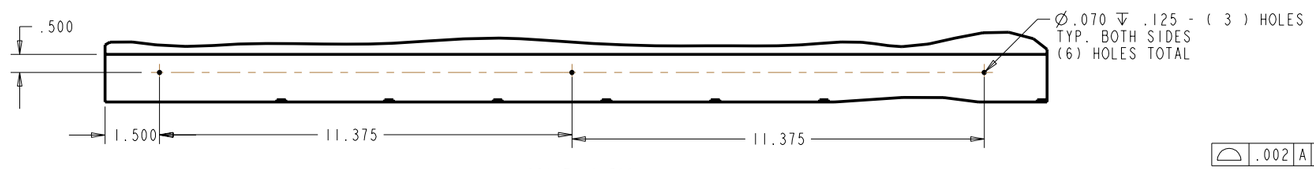

SCALE 0.500

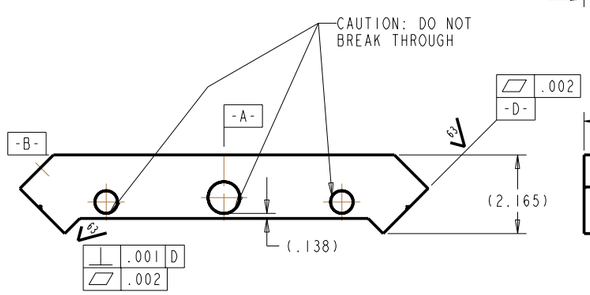

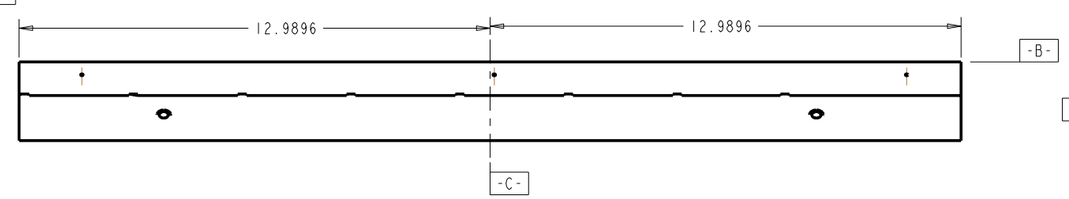

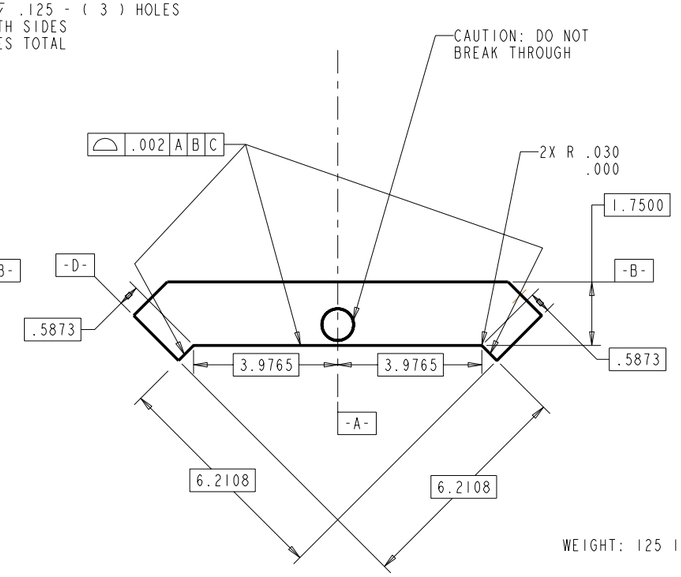

WEIGHT: 125 lbs.

NOTE:

1. THE USE OF SULPHUR BEARING OILS OR ABRASIVES IS PROHIBITED.
2. PROCESSES SUCH AS GRINDING, AND OR POLISHING THAT MAY RESULT IN EMBEDDED CONTAMINATION OF THE PART ARE PROHIBITED.
3. USE ONLY CIMCOOL, KOOLMIST #77, MOBIL CUT-MAX, MISSILE LUBE #5, OR AN ANL APPROVED EQUAL LUBRICANT FOR MACHINING.
4. PRIOR TO SHIPPING ALL SURFACES OF THE PART ARE TO BE THOROUGHLY CLEANED, AND FREE OF ALL OIL AND OR SOLUTIONS.
5. ALL MOUNTING HOLES ARE TO STRADDLE THE BEAM DIR. CENTERLINES IN THE HORIZONTAL PLANE, OR AS NOTED.

ITEM	DRAWING/PART NUMBER	NOMENCLATURE OR DESCRIPTION	MATERIAL/SPEC	QTY
1	G12836	QUARDANT BRAZE ASSEMBLY	SEE PARTS LIST	1

PARTS LIST/BILL OF MATERIALS

UNLESS OTHERWISE SPECIFIED ALL DIMENSIONS ARE IN INCHES
TOLERANCES
DECIMALS .X ±.1 .XX ±.01 .XXX ±.005 .XXXX ±.001
ANGULAR ±.5°
SURFACE ROUGHNESS 63

REMOVE ALL BURRS AND BREAK SHARP EDGES .03 MAX. SURFACE TEXTURE TO BE IN ACCORDANCE WITH LATEST ANSI B46.1
DIMENSIONING & TOLERANCING IN ACCORDANCE WITH LATEST ANSI Y14.5

MODEL NAME: A98-01153-1_QUAD_FIN_MC_525

ELECTRONIC FILE NAME: G12831

DRAWN BY: B. RUSTHOVEN	DATE 16-Jun-03		
CHECKED BY:	DATE		
DESIGNED BY: B. RUSTHOVEN	DATE 16-Jun-03		
RESPONSIBLE ENGINEER: S. SHARMA	DATE		
GROUP LEADER: S. SHARMA	DATE		
APPROVED BY: D. SCHRAGE	DATE		
RELEASE LEVEL: -	VERSION: -		
MATERIAL: SEE PARTS LIST			

THIS DRAWING IS THE PROPERTY OF
ARGONNE NATIONAL LABORATORY
RARE ISOTOPE ACCELERATOR

TITLE:
RARE ISOTOPE ACCELERATOR
CONCEPTUAL DESIGN
57 MHZ RFQ STRUCTURE
QUADRANT MACHINING 5.25 HOLE

SIZE	FSCM No	DRAWING NUMBER:	REV.
D	0HRH5	G12831	00

SCALE: 0.500 | DO NOT SCALE DRAWING | SHEET 1 OF 1