REVISIONS					
ZONE	REV	DESCRIPTION	BY	APPROVED	DATE

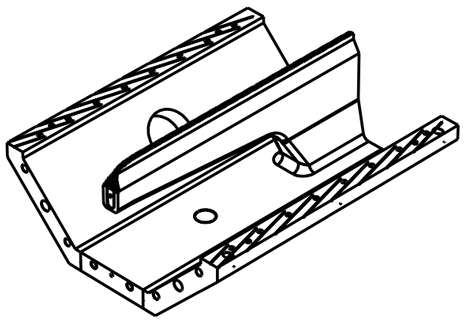

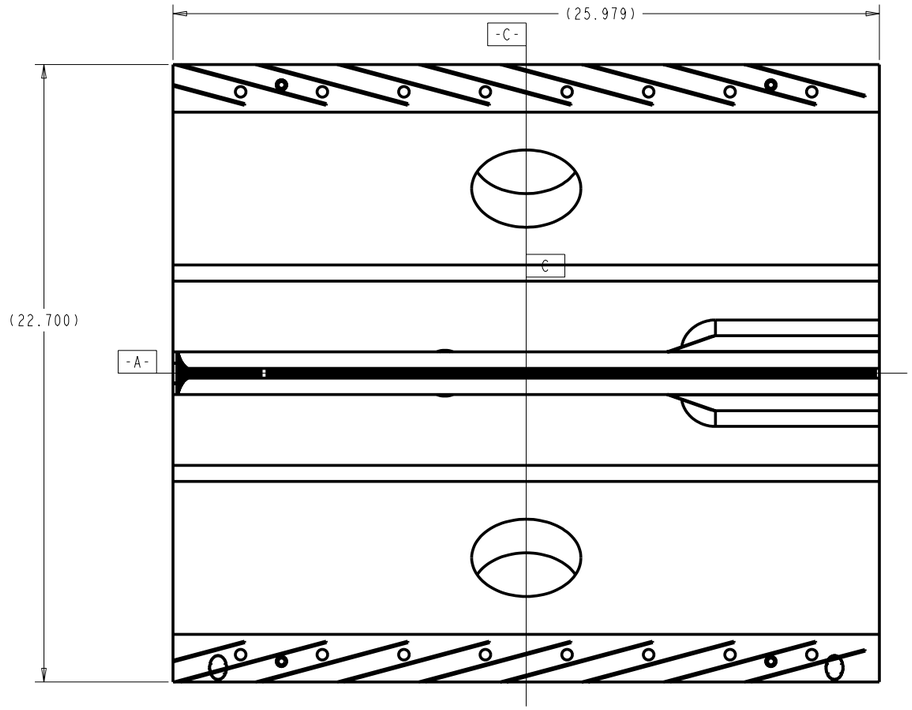

ASSEMBLY PROCEDURE
1. CLEAN ALL PARTS AS LISTED IN THE CLEANING PROCEDURE.
2. INSTALL (1) ITEM #2 (G13833), PLACE (8) HEX NUTS AND WASHERS ON PREINSTALLED STUDS.
3. HAND TIGHTEN ALL NUTS SECURELY FOR INITIAL ALIGNMENT.
4. REPEAT STEPS 2 & 3 ON THE OPPOSITE SIDE.
5. TIGHTEN THE NUTS USING THE BOLTING SEQUENCE SHOWN BELOW,

- SEQUENCE #1 - 25 IN/LBS
- SEQUENCE #2 - 50 IN/LBS
- SEQUENCE #3 - 75 IN/LBS
- SEQUENCE #4 -100 IN/LBS

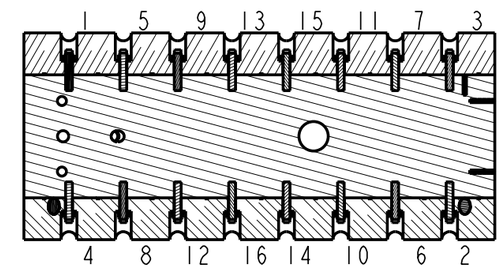

BOLTING SEQUENCE

CLEANING PROCEDURES

1. PRE-MEASURE ALL MATING COMPONENTS TO VERIFY DIAMETRICAL CLEARANCES PER THE PRINT AND EXAMINE SURFACES FOR FINISH. NO BURRS ALLOWED.

2. CLEAN THE COMPONENTS FIRST WITH ACETONE THEN USE AN ALCOHOL RINSE, DRYING PARTS WITH CLEAN SHOP RAGS. THEN IMMERSE THE PARTS IN A CLEAN DE-IONIZED WATER AND 3-5% CITRANOX SOLUTION IN AN ULTRASONIC TANK AT 90-110 F FOR 15 MINUTES.

3. BLOW-DRY THE PARTS WITH CLEAN DRY NITROGEN. PLACE ALCOHOL IN THE DRILLED HOLES OF THE PLATE AND VANE AND BLOW DRY WITH DRY NITROGEN.

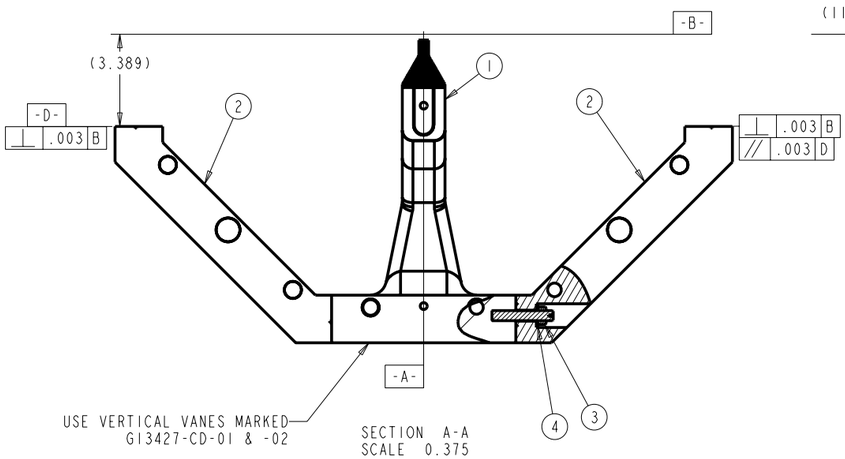

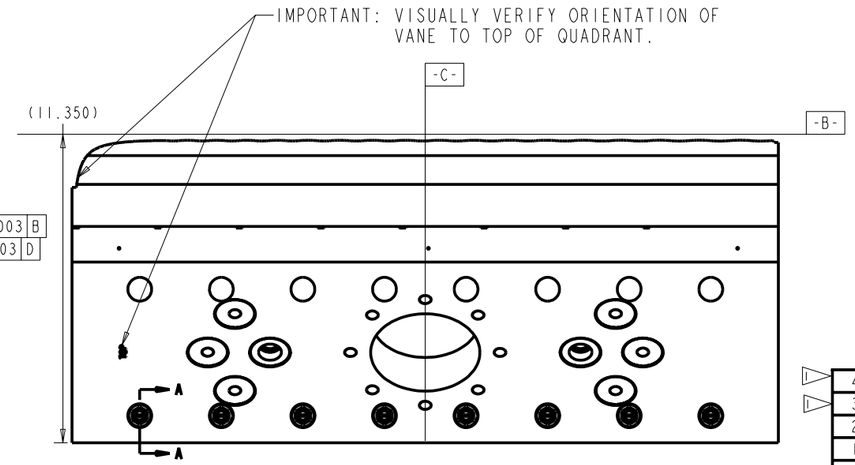

WEIGHT: 425 lbs.

ITEM	DRAWING/PART NUMBER	NOMENCLATURE OR DESCRIPTION	MATERIAL/SPEC	QTY
4	98019A399	3/8x13/16 M.S. WASHER	18-8 SST	16
3	90499A815	3/8-24 HEX NUT	GRADE 8 P.S.	16
2	G12833	QUADRANT FINAL MACHINING	SEE PARTS LIST	2
1	G13426	VERTICAL VANE FINAL ASSEMBLY	SEE PARTS LIST	1

PARTS LIST/BILL OF MATERIALS

▷ SOURCE OR EQUIVALENT
McMASTER CARR
P.O. BOX 4355
CHICAGO, IL 60680-4355
(630) 833-0300
www.mcmaster.com

UNLESS OTHERWISE SPECIFIED ALL DIMENSIONS ARE IN INCHES
TOLERANCES
DECIMALS .X ±.1 .XX ±.01 .XXX ±.005
ANGULAR ±.5°
SURFACE ROUGHNESS √

REMOVE ALL BURRS AND BREAK SHARP EDGES .03 MAX.
SURFACE TEXTURE TO BE IN ACCORDANCE WITH LATEST ANSI B46.1
DIMENSIONING & TOLERANCING IN ACCORDANCE WITH LATEST ANSI Y14.5

MODEL NAME: A98-01151-7_MAJ_VANE

ELECTRONIC FILE NAME: G12830

DRAWN BY: B. RUSTHOVEN	DATE 13-Jun-03		
CHECKED BY:	DATE		
DESIGNED BY: B. RUSTHOVEN	DATE 13-Jun-03		
RESPONSIBLE ENGINEER: S. SHARMA	DATE		
GROUP LEADER: S. SHARMA	DATE		
APPROVED BY:	DATE		
RELEASE LEVEL: -	VERSION: -		
MATERIAL: SEE PARTS LIST			

THIS DRAWING IS THE PROPERTY OF
ARGONNE NATIONAL LABORATORY
RARE ISOTOPE ACCELERATOR

TITLE:
RARE ISOTOPE ACCELERATOR
CONCEPTUAL DESIGN
57 MHZ RFQ STRUCTURE
MAJOR VANE ASSEMBLY

SIZE	TSCW No	DRAWING NUMBER:	REV.
D	OHRH5	G12830	00

SCALE: 0.375 DO NOT SCALE DRAWING SHEET 1 OF 1