REVISIONS					
ZONE	REV.	DESCRIPTION	BY	APPROVED	DATE

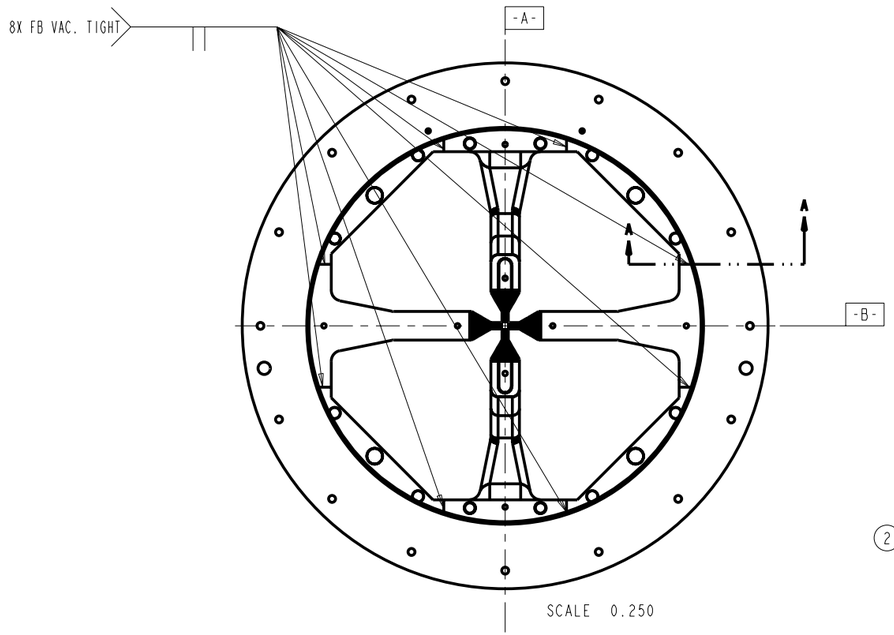

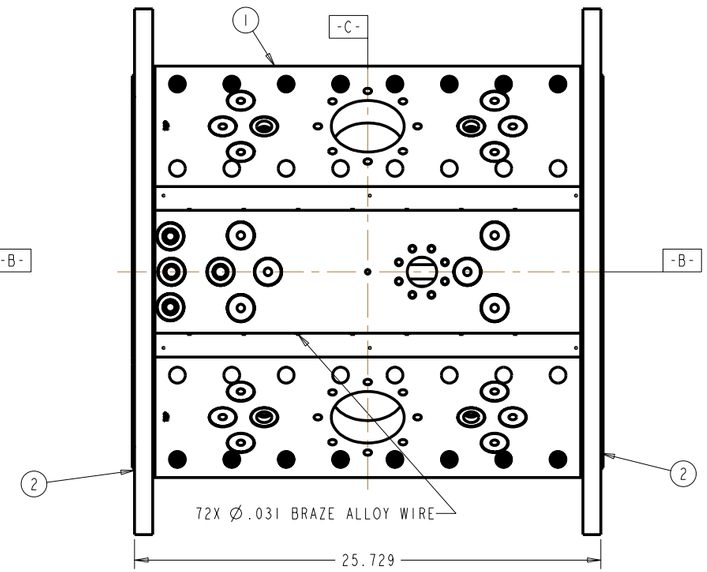

CLEANING AND BRAZING PROCEDURES

1. PRE-MEASURE ALL MATING COMPONENTS TO VERIFY DIAMETRICAL CLEARANCES PER THE PRINT AND EXAMINE SURFACES FOR FINISH. NO BURRS ALLOWED.

2. CLEAN THE COMPONENTS FIRST WITH ACETONE THEN USE AN ALCOHOL RINSE, DRYING PARTS WITH CLEAN SHOP RAGS. THEN IMMERSE THE PARTS IN A CLEAN DE-IONIZED WATER AND 3-5% CITRANOX SOLUTION IN AN ULTRASONIC TANK AT 90-110 F FOR 15 MINUTES.

3. BLOW-DRY THE PARTS WITH CLEAN DRY NITROGEN. PLACE ALCOHOL IN THE DRILLED HOLES OF THE PLATE AND VANE AND BLOW DRY WITH DRY NITROGEN.

4. AFTER STEP # 2 ALL PARTS ARE TO BE HANDLED WITH CLEAN LATEX OR NITRILE GLOVES. PARTS MUST BE KEPT ON CLEAN, DRY SURFACES AND STORED IN OIL FREE ALUMINUM FOIL. BRAZING MUST TAKE PLACE WITHIN 48 HOURS OF CLEANING.

5. ROLL AND CUT 0.031 DIAMETER CUSIL (72 Ag - 28 Cu) FILLER WIRE TO CONFORM TO THE SEAM GROOVES. INSTALL THE WIRE INTO THE APPROPRIATE GROOVES.

6. APPLY CUSIL (72 Ag - 28 Cu) PASTE TO THE O.D. OF THE FLANGE. FILL THE CHAMFERED AREA.

7. FURNACE BRAZE PARTS IN A POSITIVE PRESSURE HYDROGEN RETORT. HYDROGEN GAS FLOW 0.005 L/MINUTE/CUBIC IN OF RETORT INSIDE AREA MINIMUM. HYDROGEN GAS MINIMUM DEW POINT -35°C. PARTS TO BE ARRANGED TO ALLOW A FREE FLOW OF HYDROGEN TO ALL SIDES OF THE PART.

8. BRAZE CYCLE FOR REFERENCE ONLY:
   PLEASE SUPPLY BRAZE PROCEDURE TO ANL FOR APPROVAL PRIOR TO COMPLETION IF DEVIATING FROM THE PROCEDURE BELOW.

   * FURNACE MUST PULL A VACUUM 1 X 10-3 TORR BEFORE THE INTRODUCTION OF HYDROGEN GAS.
   * PREHEAT PARTS TO 680-700°C HOLD UNTIL STABILIZED.
   * HEAT AT THE FURNACE AT A 50°C/MINUTE MINIMUM RATE.
   * BRAZE HOLD POINT AT 790°C PART TEMPERATURE, HOLD FOR 1 MINUTE.
   * COOL AT 100°C/MINUTE.
   * DO NOT INTRODUCE INERT GAS COOLING UNTIL PARTS ARE BELOW 600°C.
   * DO NOT OPEN PARTS TO ATMOSPHERE UNTIL PARTS ARE BELOW 150°C

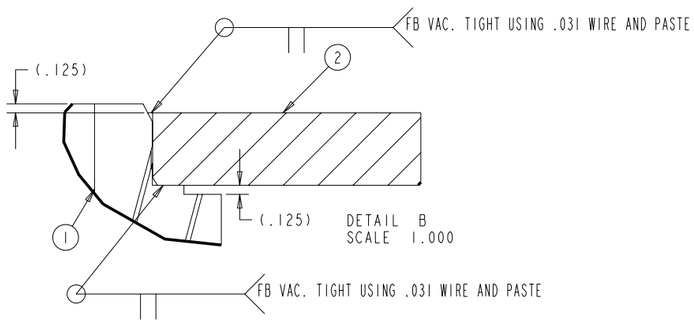

DETAIL B
SCALE 1.000

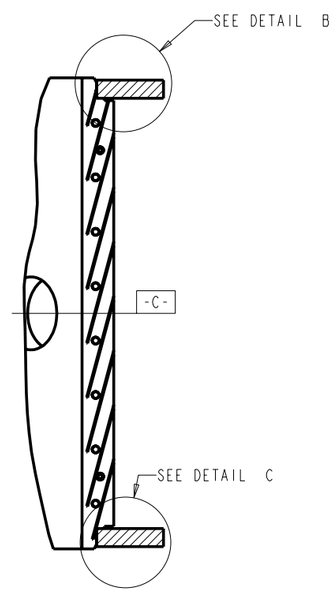

SECTION A-A
ORIENTATION FOR BRAZING

NOTES:
1. HYDROGEN FURNACE BRAZE USING CUSIL (72Ag-28Cu).
2 CLEAN COMPONENTS FOR VACUUM SERVICE (10^{-10}Torr).
3 LEAK TEST WITH HELIUM MASS SPECTROMETER LEAK DETECTOR. TOTAL LEAK RATE NOT TO EXCEED $1x10^{-9}$ STD. (cc/Sec HE).

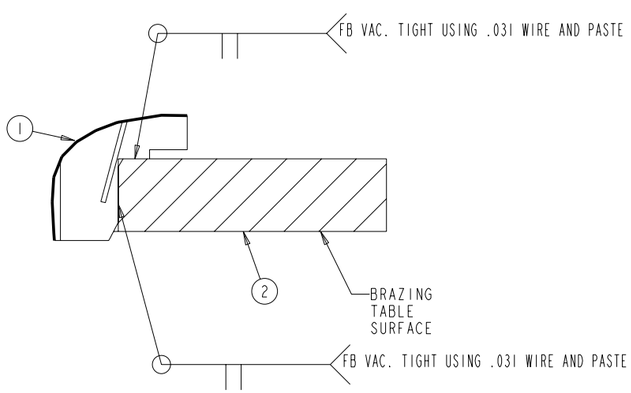

DETAIL C
SCALE 1.000

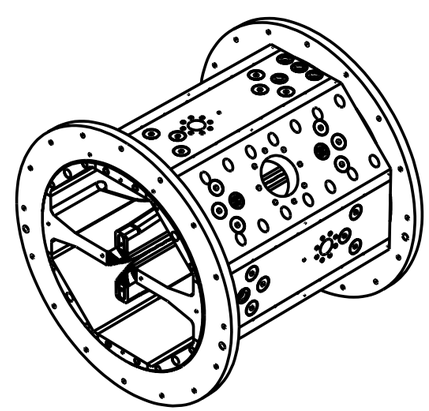

1 SOURCE OR EQUIVALENT
McMASTER CARR
P.O. BOX 4355
CHICAGO, IL 60680-4355
(630) 833-0300
www.mcmaster.com

WEIGHT: 1311 lbs.

ITEM	DRAWING/PART NUMBER	NOMENCLATURE OR DESCRIPTION	MATERIAL/SPEC	QTY
4	8472A11	1/4" ROUND LOCATING PIN	STEEL	4
3	-----	72Ag-28Cu CUSIL BRAZE MATERIAL	Ag/Cu	--
2	G12841	BODY FLANGE	OFE COPPER F68-99 CLASS 2 OR BETTER	2
1	G12828	PRE-BRAZE MACHINING	SEE PARTS LIST	1

PARTS LIST/BILL OF MATERIALS

UNLESS OTHERWISE SPECIFIED ALL DIMENSIONS ARE IN INCHES TOLERANCES
DECIMALS: .X ±.1, .XX ±.01, .XXX ±.005 — ANGULAR ±.5°
SURFACE ROUGHNESS 32

REMOVE ALL BURRS AND BREAK SHARP EDGES .03 MAX. SURFACE TEXTURE TO BE IN ACCORDANCE WITH LATEST ANSI B46.1 DIMENSIONING & TOLERANCING IN ACCORDANCE WITH LATEST ANSI Y14.5

MODEL NAME: A98-01151-7_MAJ_VANE

ELECTRONIC FILE NAME: G12827

DRAWN BY: B. RUSTHOVEN	DATE 13-Jun-03	
CHECKED BY:	DATE	
DESIGNED BY: B. RUSTHOVEN	DATE 13-Jun-03	
RESPONSIBLE ENGINEER: S. SHARMA	DATE	
GROUP LEADER: S. SHARMA	DATE	
APPROVED BY:	DATE	
RELEASE LEVEL: -	VERSION: -	
MATERIAL: SEE PARTS LIST		

THIS DRAWING IS THE PROPERTY OF
ARGONNE NATIONAL LABORATORY
RARE ISOTOPE ACCELERATOR

TITLE:
RARE ISOTOPE ACCELERATOR
CONCEPTUAL DESIGN
57 MHZ RFQ STRUCTURE
SEGMENT PRE-BRAZE ASSEMBLY

SIZE D | FSCM No 0HRH5 | DRAWING NUMBER: G12827 | REV. 00
SCALE: 0.250 | DO NOT SCALE DRAWING | SHEET 1 OF 1