REVISIONS					
ZONE	REV	DESCRIPTION	BY	APPROVED	DATE
	01	SEE DCN NO. 960625-06	RHP		960624
	02	SEE DCN NO. 990107-03	GLC	JJ	1/7/99

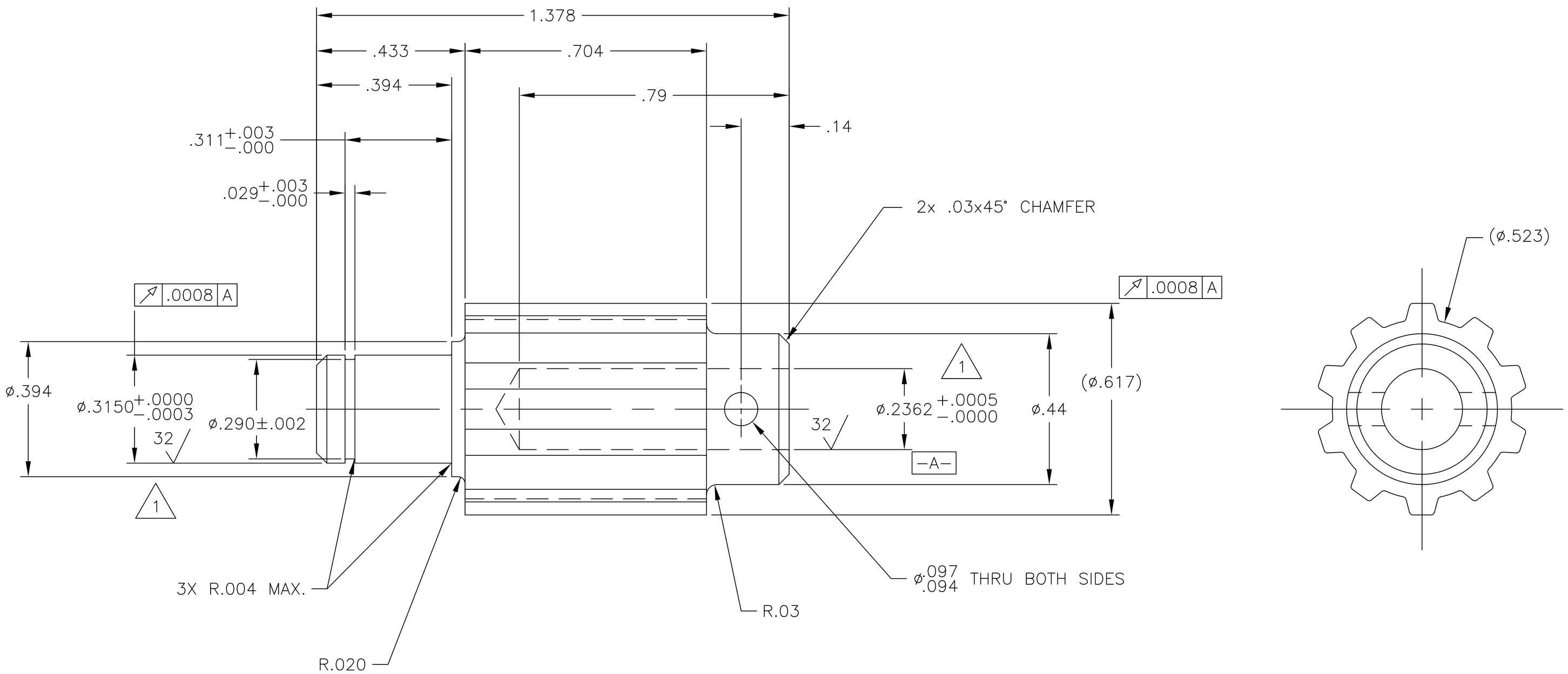

NOTES:

1. MATERIAL: ALUMINUM, 6061-T6

2. PURCHASE FROM: H. NEUMAN & CO.
10524 UNITED PARKWAY
SCHILLER PARK, IL 60176
PHONE: (708)671-5885
PULLEY STOCK #10XL-PS-6A

USED ON 31040101-340000

ITEM	DRAWING / PART NUMBER	NOMENCLATURE OR DESCRIPTION	MATERIAL / SPEC	QTY

PARTS LIST / BILL of MATERIALS

UNLESS OTHERWISE SPECIFIED: ALL DIMENSIONS ARE IN INCHES
TOLERANCES
DECIMALS: .X ±.1; .XX ±.01; .XXX ±.005
ANGULAR: ±.50°
SURFACE ROUGHNESS: 125
REMOVE ALL BURRS AND BREAK SHARP EDGES .03 MAX.
SURFACE TEXTURE TO BE IN ACCORDANCE WITH LATEST ANSI B46.1
DIMENSIONING & TOLERANCING IN ACCORDANCE WITH LATEST ANSI Y14.5

MATERIAL: SEE NOTE

ELECTRONIC FILE NAME: A2428902

DRAWN BY: L. MORRISON	DATE: 04/08/96	
CHECKED BY:	DATE	
DESIGNED BY: CHERRY GLEN	DATE: 5/10/96	
RESPONSIBLE ENGINEER: JONES JUSTIN	DATE: 6/96	
GROUP LEADER: S SHARMA	DATE: 6/96	
APPROVED BY:	DATE	
APPROVED BY:	DATE	
APPROVED BY:	DATE	

THIS DRAWING IS THE PROPERTY OF
ARGONNE NATIONAL LABORATORY
ADVANCED PHOTON SOURCE

TITLE:
STORAGE RING, TECHNICAL COMPONENTS
STORAGE RING TECHNICAL COMPONENTS
RF SYSTEM
352 MHZ SYSTEM
CAVITY

SIZE	FSCM No.	DRAWING NUMBER:	REV.
C	0HRH5	31040101-340010	02

SCALE: 4:1 | DO NOT SCALE DRAWING | SHEET: 1 of 1