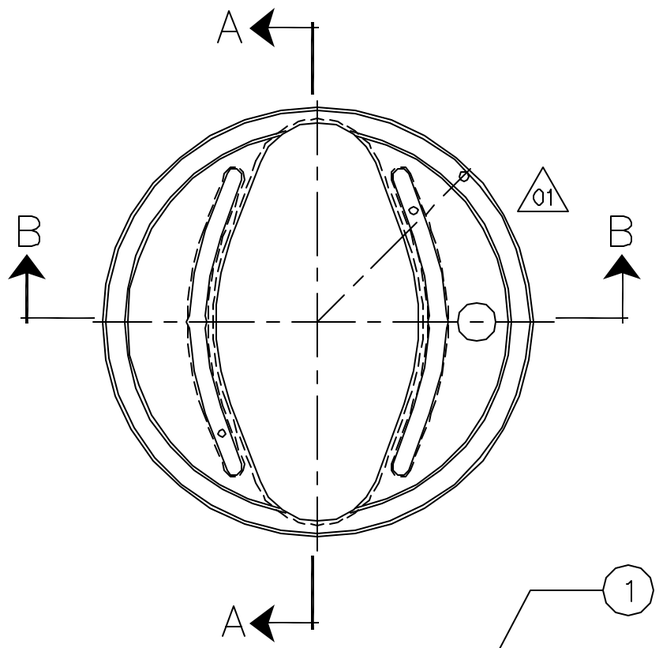

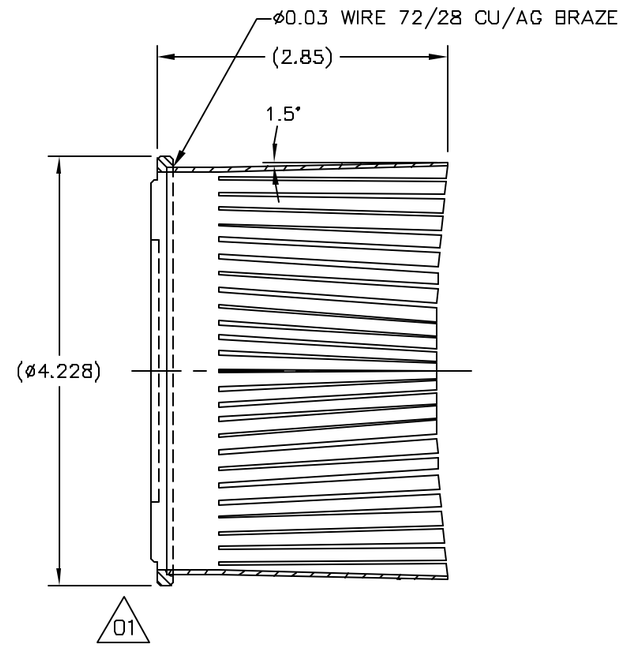

SECTION A — A

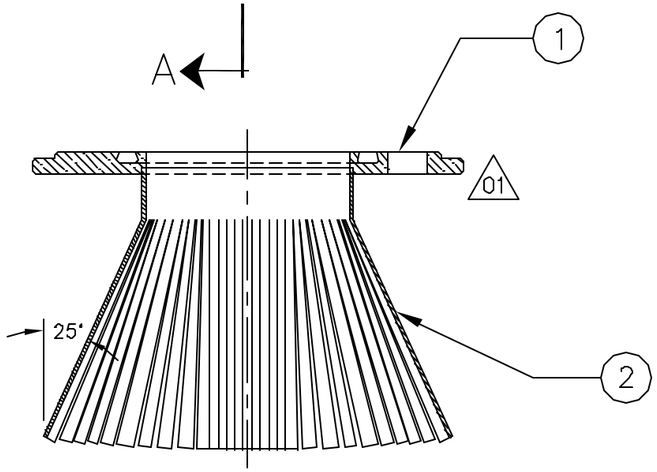

SECTION B — B

ITEM	DWG/PART NUMBER	NOMENCLATURE OR DESCRIPTION	MATERIAL / SPEC	QTY
2	31040101-821001	SHIELDING CONTACT	BERRILIUM COPPER	1
1	31040101-821002	INSERT	COPPER	1

PARTS LIST

SYM	CHANGE DESCRIPTION	BY	CHKD	DATE
01	SEE DCN #941027-01	LHM		10/94

REVISIONS

UNLESS OTHERWISE SPECIFIED: ALL DIMENSIONS ARE IN INCHES
TOLERANCES
DECIMALS: .X ±.1, .XX ±.02, .XXX ±.005
ANGULAR: ±.25°
SURFACE ROUGHNESS 63
REMOVE ALL BURRS AND BREAK SHARP EDGES .03 MAX.
SURFACE TEXTURE TO BE IN ACCORDANCE WITH LATEST ANSI B46.1
DIMENSIONING & TOLERANCING IN ACCORDANCE WITH LATEST ANSI Y14.5
DO NOT SCALE DRAWING

LOG NUMBER A2052301

THIS DRAWING IS THE PROPERTY OF ARGONNE NATIONAL LABORATORY

DRAWN BY L.MORRISON	DATE 9-7-94	GP LEADER Y. KANG	DATE 9/94
CHECKED BY		PROJECT MGR	
DESIGNER L. MORRISON		APPROVED/RELEASED	
RESPONSIBLE ENGINEER K PRIMDAHL	9/94		

TITLE
ADVANCED PHOTON SOURCE
STORAGE RING
RF SINGLE CELL CAVITIES
SECTOR 40
TRANSITION/TEE
RF LINER SUB-ASSEMBLY

MATERIAL SEE PARTS LIST

SCALE 1:1 | SHEET 1 of 1 | SIZE C

DRAWING NUMBER 31040101-821000-01