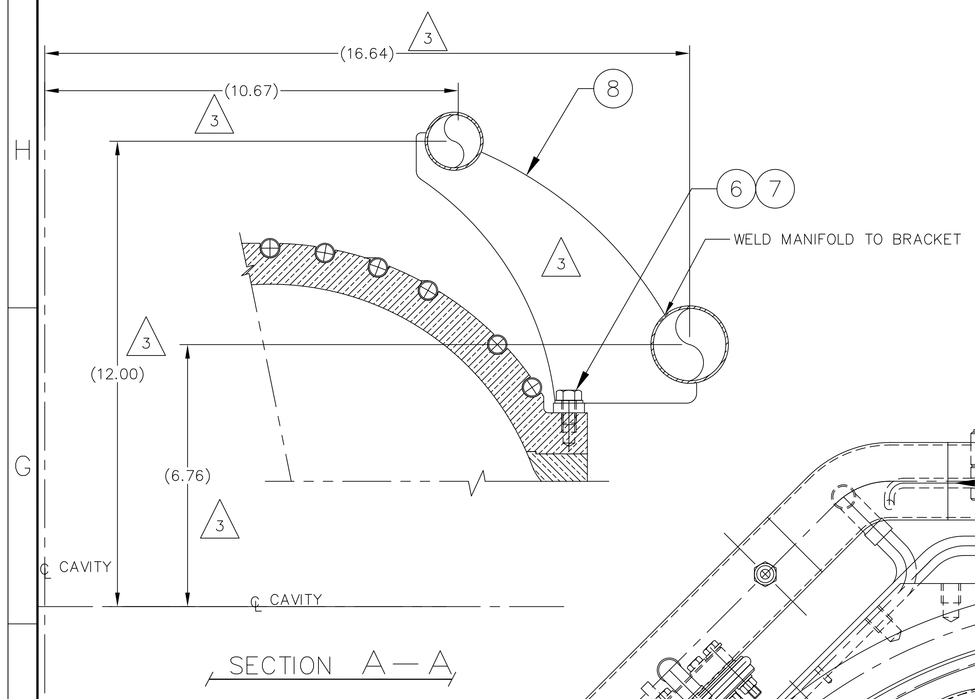

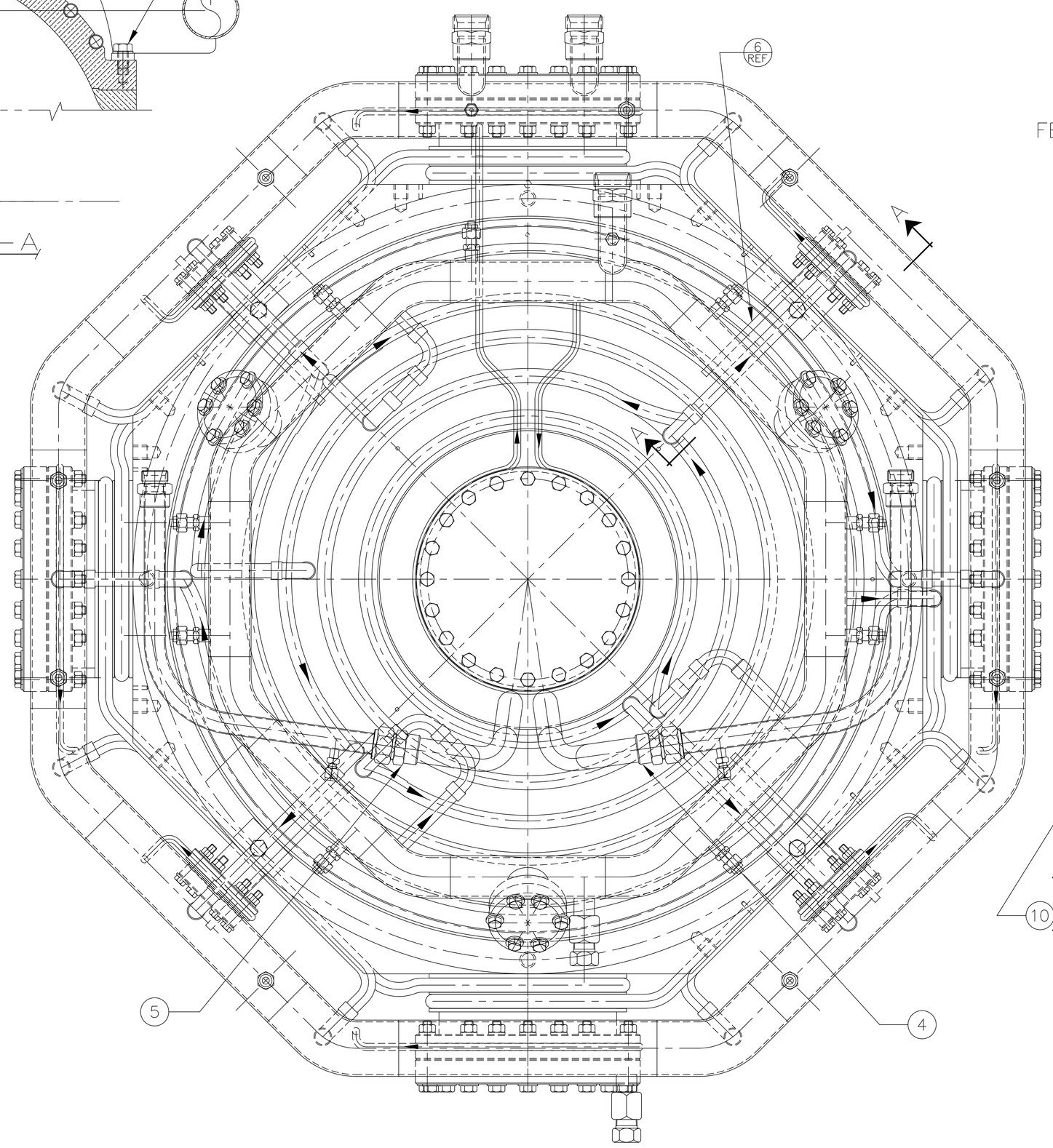

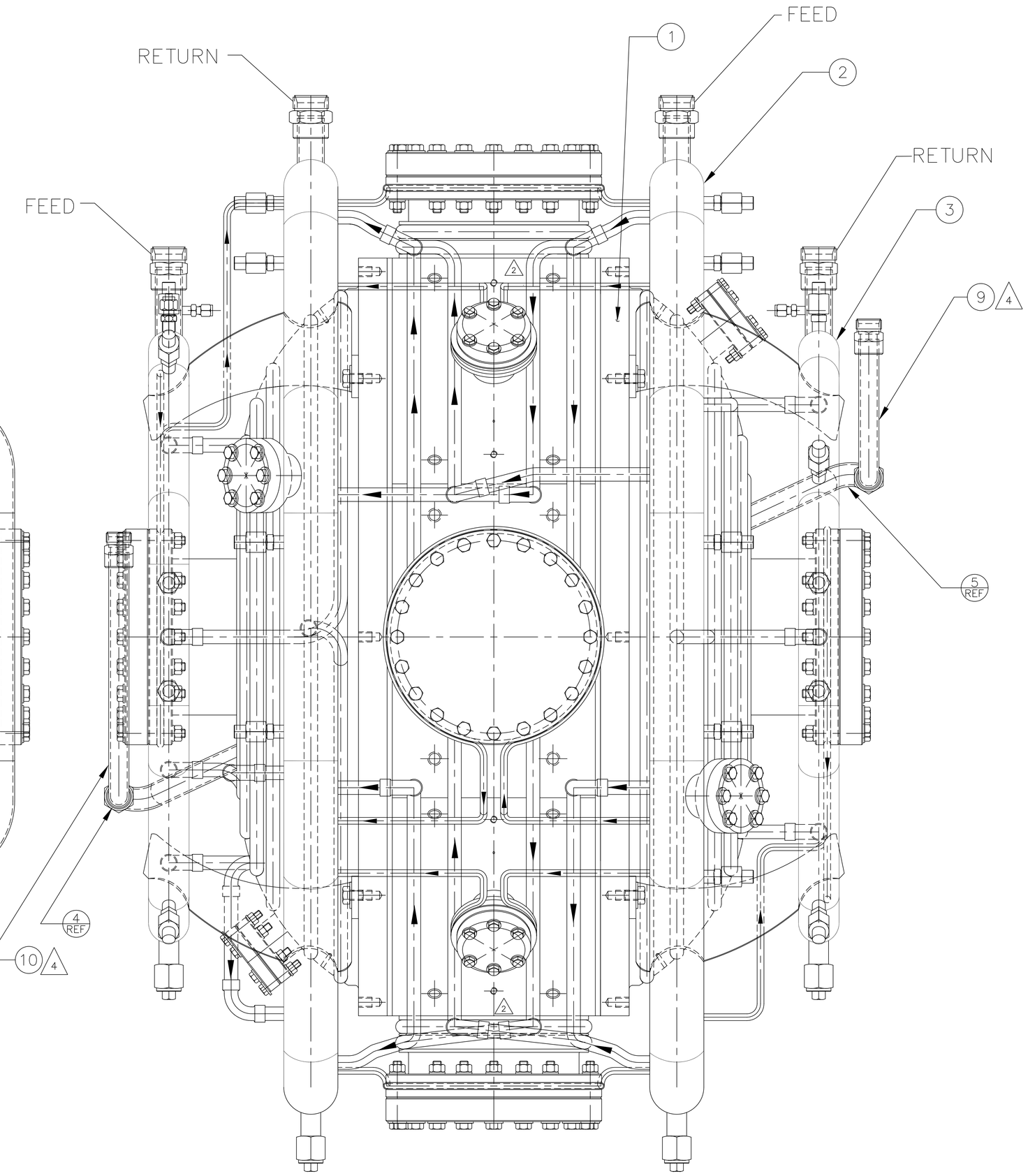

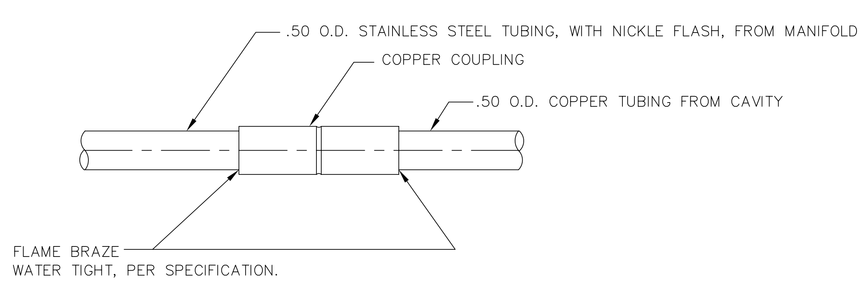

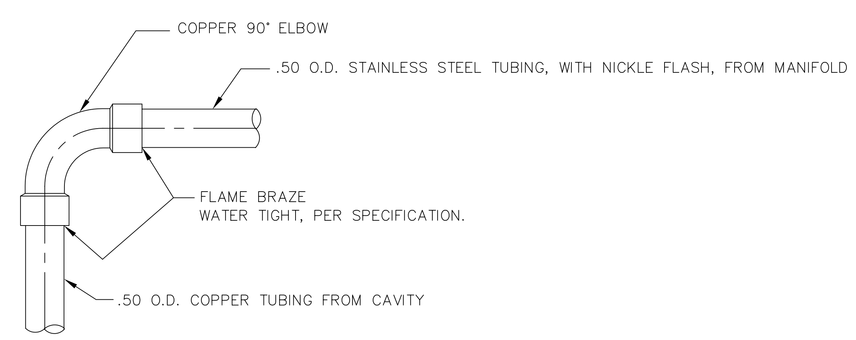

DETAIL OF JOINTS WITH COPPER AND STAINLESS STEEL TUBINGS.

NOTES:

1. THESE JOINTS ARE TYPICAL OF ALL CONNECTIONS TO THE MANIFOLDS FOR .50 DIA. .25 DIA TUBINGS.
2. CONNECTING TUBES, WITH BRAZED COUPLINGS, SHALL BE CUT—TO FIT / FORM—TO —FIT SO THAT WATER FLOW AND OVERALL DIMENSIONS ARE AS SHAWN.

ITEM	DWG/PART NUMBER	NOMENCLATURE OR DESCRIPTION	MATERIAL / SPEC	QTY
10	31040101—150700	NOSE CONE COOLING ADAPTER — LOWER	STN. STL.	2
9	31040101—150600	NOSE CONE COOLING ADAPTER — UPPER	STN. STL.	2
8	131411—150001	BRACKET	STN.STL	8
7	STANDARD	3/8 DIA. FLAT WASHER	STN. STL.	8
6	STANDARD	3/8—16x3/4 LONG HEX. HEAD BOLT	STN. STL.	8
5	131411—180200	NOSE CONE COOLING — OUTLET PIPE	STN. STL	2
4	131411—180100	NOSE CONE COOLING — INLET PIPE	STN. STL.	2
3	131411—150200	1.50 O.D. MANIFOLD	STN. STL.	2
2	131411—150100	2.0 O.D. MANIFOLD	STN. STL.	2
1	31040101—00056	CAVITY — GENERAL ASSEMBLY		1

PARTS LIST

SYM	CHANGE DESCRIPTION	BY	CHKD	DATE
4	ADD ITEMS #9 AND #10	LHM		12/93
3	ADD DIMS. 16.64,10.67,12.00 6.67, REVISE MANIFOLD BRACKET	LHM		10/93
2	REROUTE PIPES TO MANIFOLD	LHM		9/93
1	ITEM 7 PN. CHANGED	BMB		

REVISIONS

UNLESS OTHERWISE SPECIFIED: ALL DIMENSIONS ARE IN INCHES
TOLERANCES
DECIMALS: .X ±.1, .XX ±.02, .XXX ±.005 — ANGULAR: ±.25°
SURFACE ROUGHNESS 63√
REMOVE ALL BURRS AND BREAK SHARP EDGES .03 MAX.
SURFACE TEXTURE TO BE IN ACCORDANCE WITH LATEST ANSI B46.1
DIMENSIONING & TOLERANCING IN ACCORDANCE WITH LATEST ANSI Y14.5
DO NOT SCALE DRAWING

LOG NUMBER: A15116

THIS DRAWING IS THE PROPERTY OF ARGONNE NATIONAL LABORATORY

		DATE
DRAWN BY	L.MORRISON	11-15-92
CHECKED BY		
DESIGNER		
RESPONSIBLE ENGINEER	K.PRIMDAHL	2-4-93
GP LEADER	R.KUSTOM	2-4-93
PROJECT MGR		
APPROVED/RELEASED		

MATERIAL: SEE PARTS LIST

TITLE: ADVANCED PHOTON SOURCE
STORAGE RING
RF SINGLE CELL CAVITY
CAVITY AND MANIFOLD
ASSEMBLY

SCALE 1:2 — SHEET 1 of 1 — SIZE E

DRAWING NUMBER 131411—150000—04