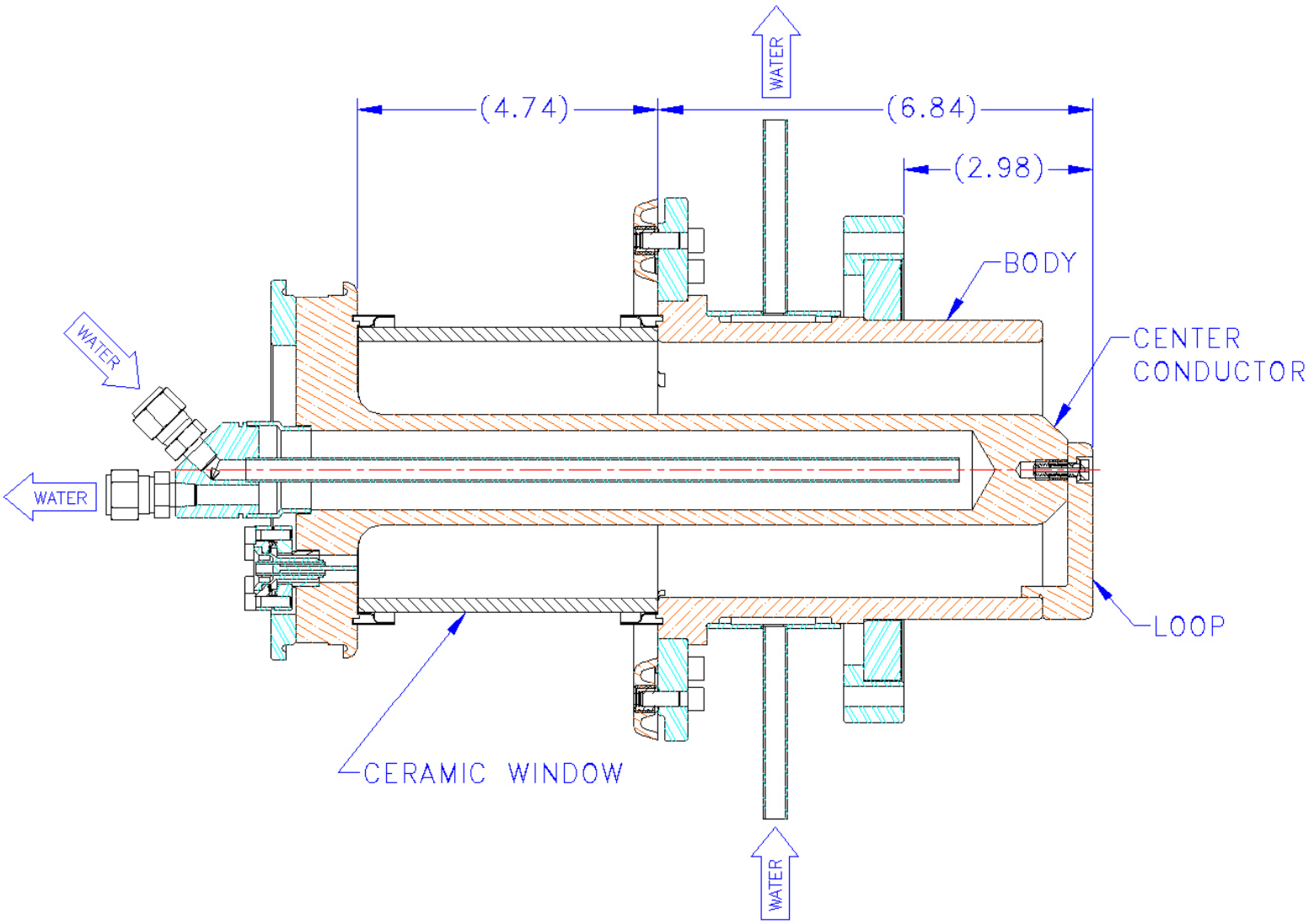
WATER
(4.74)
(6.84)
(2.98)
BODY
CENTER
CONDUCTOR
WATER
WATER
LOOP
CERAMIC WINDOW
WATER