REVISIONS					
ZONE	REV	DESCRIPTION	BY	APPROVED	DATE
B6	01	ADDED ASSEMBLY PROCEDURE NOTE	BMR	ER	1/29/02

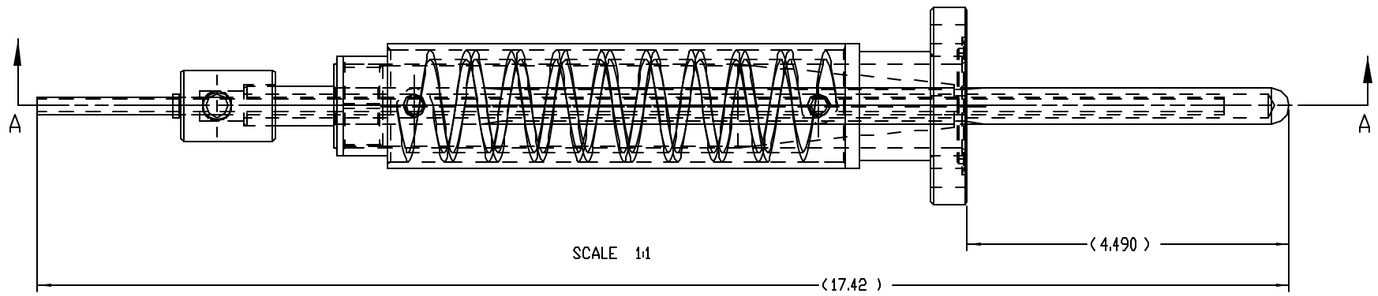

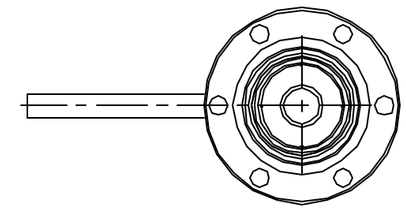

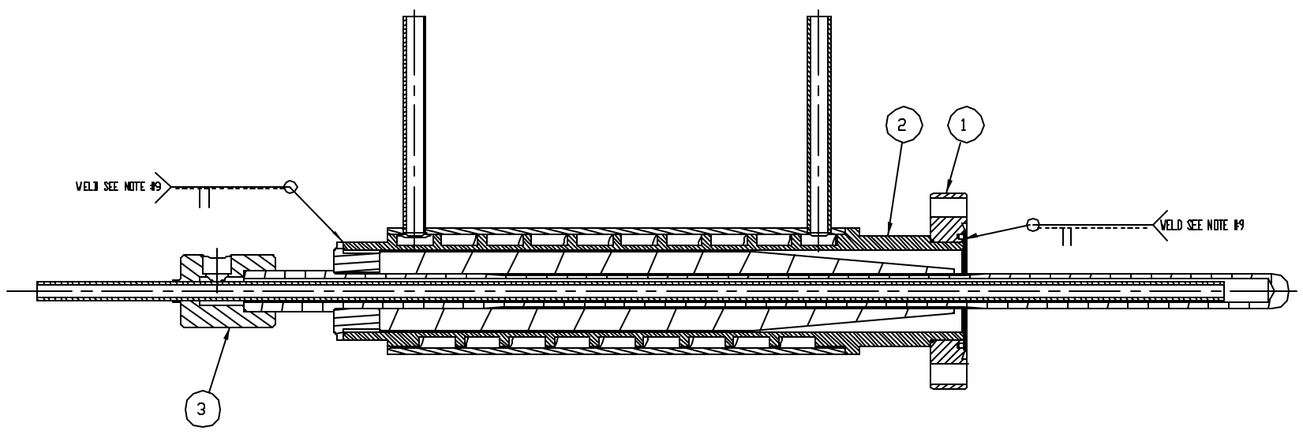

SECTION A-A

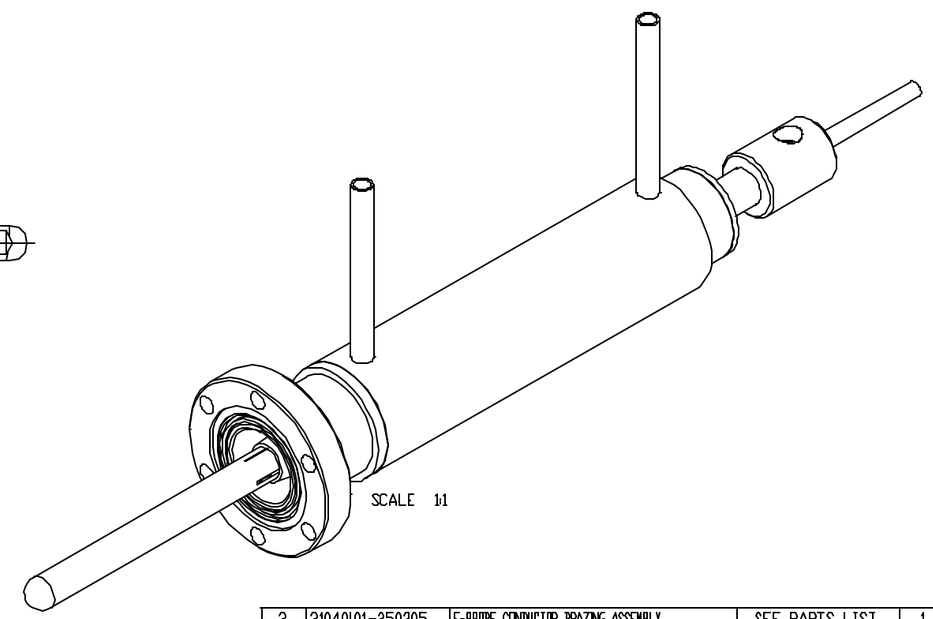

SCALE 1:1

NOTE:

1 THE USE OF SULPHUR BEARING OILS OR ABRASIVES IS PROHIBITED.

2 PROCESSES SUCH AS GRINDING, AND OR POLISHING THAT MAY RESULT IN EMBEDDED CONTAMINATION OF THE PART ARE PROHIBITED.

3 USE ONLY CIMCOOL, KOOLMIST #77, MOBIL CUT-MAX, MISSILE LUBE #5, OR AN ANL APPROVED EQUAL LUBRICANT FOR MACHINING.

4 PRIOR TO SHIPPING ALL SURFACES OF THE PART ARE TO BE THOROUGHLY CLEANED, AND FREE OF ALL OIL AND OR SOLUTIONS.

5 OPERATING CONDITIONS: FULL VACUUM @70°F-300°F

6 CLEAN COMPONENTS FOR VACUUM SERVICE (10^{-10} Tor.) IF APPLICABLE PRIOR TO ASSEMBLY.

7 ALL MOUNTING HOLES IN NON-ROTATABLE FLANGES ARE TO STRADDLE THE BEAM DIR. CENTERLINES IN THE HORIZONTAL PLANE, OR AS NOTED.

8 ALL WELDS TO BE INTERNAL EXCEPT AS NOTED, OR REQ'D, ALL EXT WELDS TO HAVE FULL PENETRATION

9 WELD JOINT MUST BE VACUUM TIGHT AND TESTED NO LEAK SHOULD BE DETECTABLE USING THE MOST SENSITIVE SCALE OF A HELIUM MASS SPECTROMETER WITH A MINIMUM SENSITIVITY OF 1.5×10^{-10} (Tor./Sec) OF HELIUM OR BETTER.

ASSEMBLY PROCEDURES:

1. E-PROBE CONDUCTOR BRAZING ASSEMBLY (31040101-350305)
   - A. BRAZE WATER MANIFOLD (31040101-350308) TO E-PROBE CONDUCTOR (31040101-350306)
   - B. BRAZE BODY CAP (31040101-350307) TO E-PROBE CONDUCTOR (31040101-350306)
   - C. WELD 1/4" TUBING TO WATER MANIFOLD (31040101-350308).

2. DAMPER BODY WELDMENT SUB-ASSEMBLY (31040101-350301)
   - A. WELD WATER SLEEVE (31040101-350303) TO DAMPER BODY (31040101-350302)
   - B. MACHINE ABOVE WELDMENT TO DIMENSION SHOWN ON 31040101-350301 SECTION A-A MACHINING LAYOUT.
   - C. WELD 5/16" TUBES TO WATER SLEEVE (31040101-350303).
   - D. HEAT BODY WELDMENT TO SUFFICIENT TEMPERATURE (~400°C) TO INSERT ABSORBER #1 (31040101-350002), USING LOCATING PAD (31040101-350309).

3. MAIN ASSEMBLY (31040101-350300)
   - A. WELD BODY FLANGE (31040101-350304) TO DAMPER BODY WELDMENT SUB-ASSEMBLY (31040101-350301).
   - B. WELD E-PROBE CONDUCTOR BRAZING ASSEMBLY (31040101-350305) TO ABOVE WELDMENT.

NOTE:

TITLE BLOCK TOLERANCES TO BE SUPERSEDED AS FOLLOWS:

DECIMALS:
.XX .01
.XXX .005

SURFACE TEXTURE: 63

ITEM	DRAWING/PART NUMBER	NOMENCLATURE OR DESCRIPTION	MATERIAL/SPEC	QTY
3	31040101-350305	E-PROBE CONDUCTOR BRAZING ASSEMBLY	SEE PARTS LIST	1
2	31040101-350301	DAMPER BODY WELDMENT/MACHINING/SUB-ASSEMBLY	SEE PARTS LIST	1
1	31040101-350304	BODY FLANGE	SEE PARTS LIST	1

PARTS LIST/BILL OF MATERIALS

UNLESS OTHERWISE SPECIFIED ALL DIMENSIONS ARE IN INCHES TOLERANCES
DECIMALS .XX ±.01 .XXX ±.005 .XXXX ±.0050
ANGULAR ±1/2°
SURFACE ROUGHNESS 63
REMOVE ALL BURRS AND BREAK SHARP EDGES .03 MAX. SURFACE TEXTURE TO BE 3N ACCORDANCE WITH LATEST ANSI Y14.5 DIMENSIONING & TOLERANCING 3N ACCORDANCE WITH LATEST ANSI Y14.5

DRAWN BY: B RUSTHOVEN	DATE 19-Sep-01	
CHECKED BY:	DATE	
DESIGNED BY: B RUSTHOVEN	DATE 19-Sep-01	
RESPONSIBLE ENGINEER: E ROTELA	DATE 19-Sep-01	
GROUP LEADER: S SHARMA	DATE 19-Sep--01	
APPROVED BY:	DATE	
MODEL NAME: 31040101-350300	RELEASE LEVEL: WIP	VERSION: 0
ELECTRONIC FILE NAME: A3212201	MATERIAL: SEE PARTS LIST	

THIS DRAWING IS THE PROPERTY OF
ARGONNE NATIONAL LABORATORY
ADVANCED PHOTON SOURCE

TITLE:
STORAGE RING - TECHNICAL COMPONENTS
RF SYSTEM - 352 MHZ SYSTEM
CAVITY - E-PROBE DAMPER
RF E-PROBE DAMPER ASSEMBLY
MAIN ASSEMBLY

SIZE	FSCM No	DRAWING NUMBER	REV.
D	CHRH5	31040101-350300	01

SCALE 1:2 DO NOT SCALE DRAWING SHEET 1 OF 1