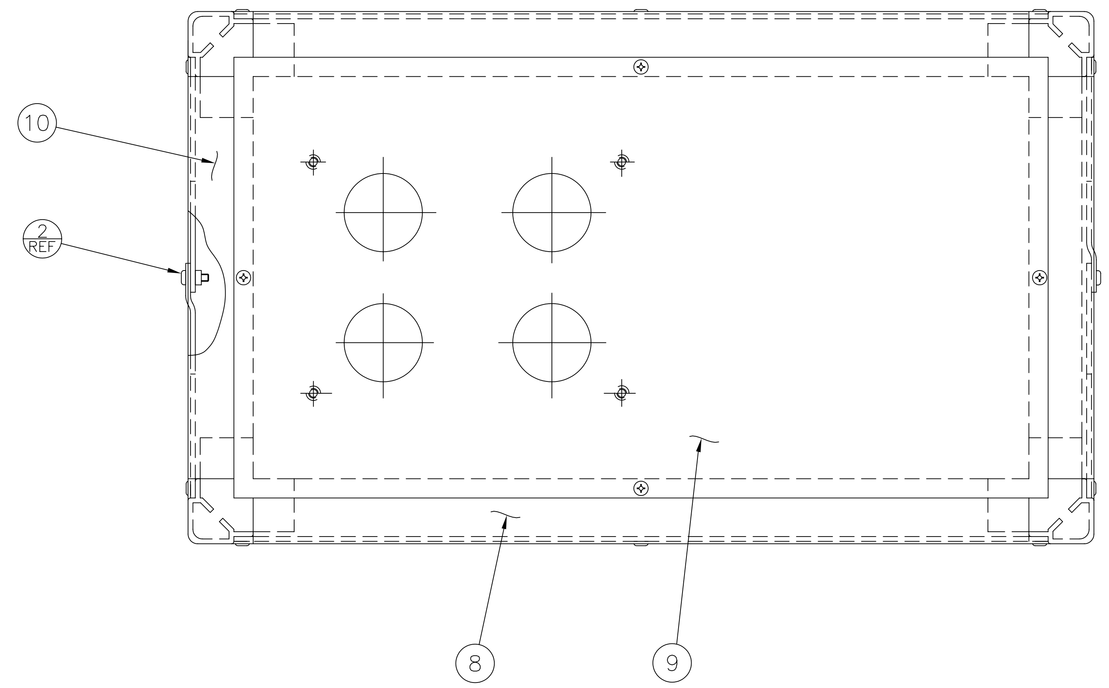

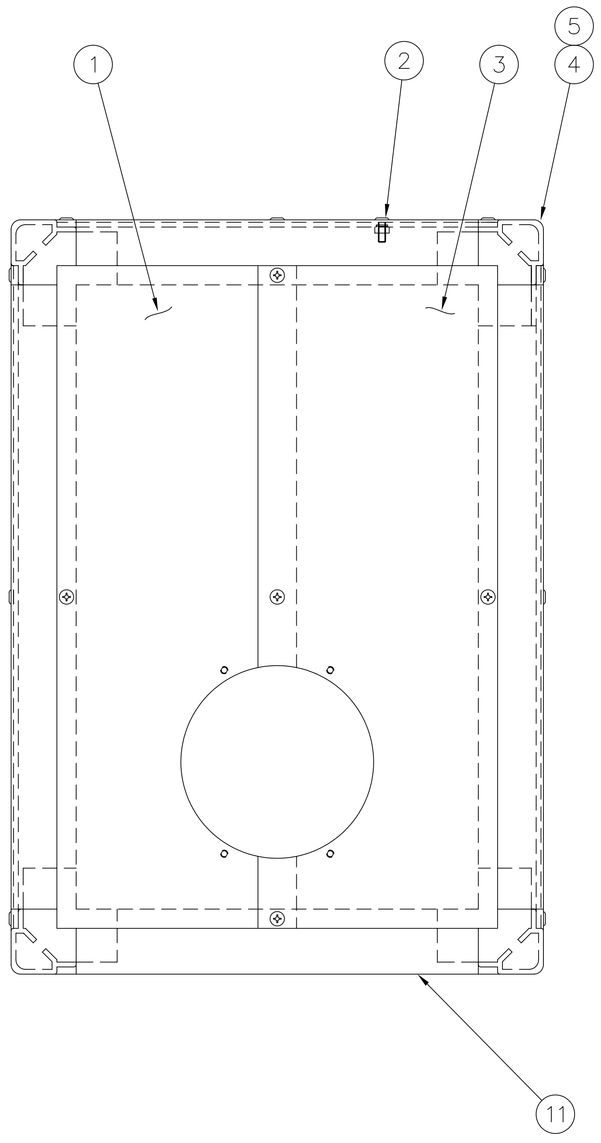

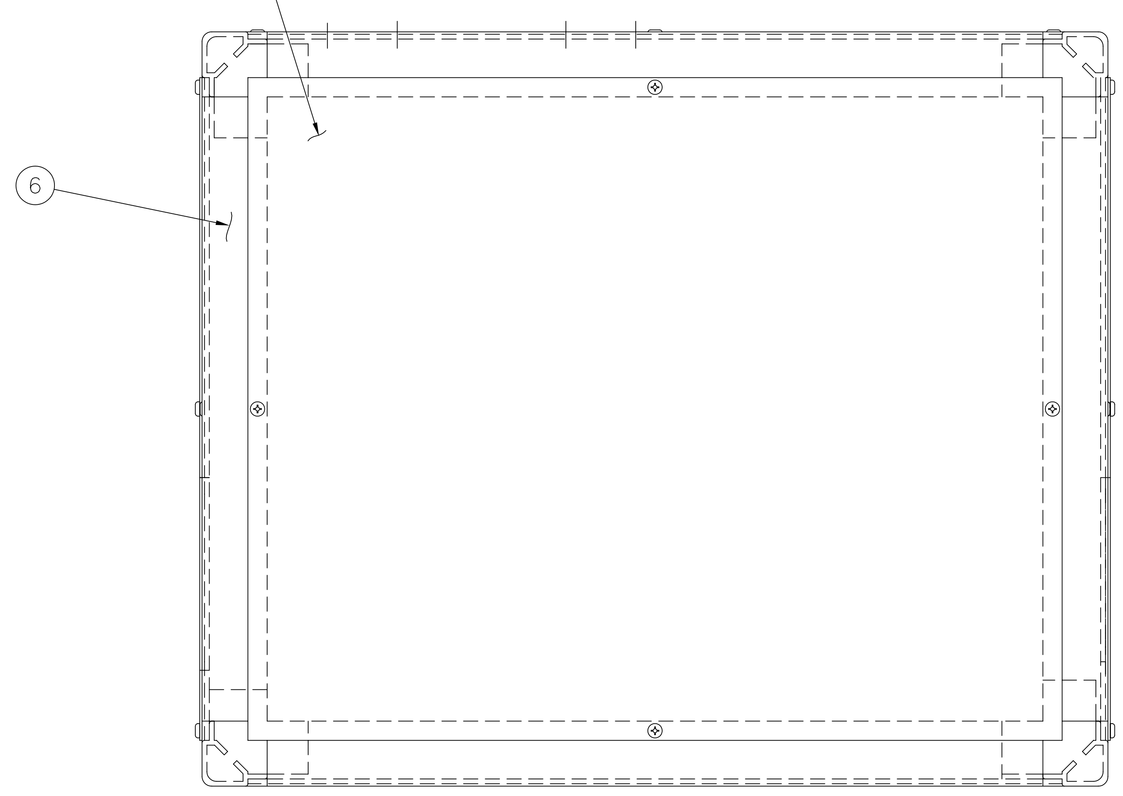

ITEM	DWG/PART NUMBER	NOMENCLATURE OR DESCRIPTION	MATERIAL / SPEC	QTY
11	31010503-770008	SUPPORT STRUT -D-	ALUM.	2
10	31010503-770007	SUPPORT STRUT -C-	ALUM.	2
9	31010503-770001	TOP PANEL	ALUM.	1
8	31010503-770006	SUPPORT STRUT -B-	ALUM.	4
7	31010503-770002	SIDE COVER	ALUM.	2
6	31010503-770005	SUPPORT STRUT -A-	ALUM.	4
1 5	DB1	FITTING PACKAGE	PURCHASE	8
1 4	DLC474	90° CORNER	ALUM.	8
3	31010503-770004	L.H. FRONT COVER	ALUM.	2
2	#10-32 UNC x .50 LG.	McMASTER PART NO. 90272A829	ZINC	22
1	31010503-770003	L.H. FRONT COVER	ALUM.	2

PARTS LIST

1 SOURCE:
WIDNEY ENCLOSURES LTD.
PLUME STREET, ASTON
BIRMINGHAM, B6 7SA, ENGLAND
021 327 5500
FAX: 021 328 2466

OR
CRYSTAL MARK, INC.
CUSTOM ENCLOSURE DIVISION
1062 FAIRVIEW DRIVE
CARSON CITY, NEVADA 89701, U.S.A.
1-800-788-7521

A13968
31010503-770000-00
1-25-94
STORAGE RING
BUMPER MAGNET
ENCLOSURE ASSEMBLY

SYM	CHANGE DESCRIPTION	BY	CHKD	DATE

REVISIONS

UNLESS OTHERWISE SPECIFIED: ALL DIMENSIONS ARE IN INCHES
TOLERANCES
DECIMALS: .X ±.1; .XX ±.02; .XXX ±.01; ANGULAR ±.50°
SURFACE ROUGHNESS 125√
REMOVE ALL BURRS AND BREAK SHARP EDGES .03 MAX.
SURFACE TEXTURE TO BE IN ACCORDANCE WITH LATEST ANSI B46.1
DIMENSIONING & TOLERANCING IN ACCORDANCE WITH LATEST ANSI Y14.5
DO NOT SCALE DRAWING

LOG NUMBER A1396800
THIS DRAWING IS THE PROPERTY OF ARGONNE NATIONAL LABORATORY

DRAWN BY M.LALE	DATE 1-25-94	GP LEADER	DATE
CHECKED BY		PROJECT MGR	
DESIGNER LALE MARK		APPROVED/RELEASED	
RESPONSIBLE ENGINEER WARNER DAVID			

TITLE
ADVANCED PHOTON SOURCE
ACCELERATOR SYSTEMS DIVISION
STORAGE RING
BUMPER MAGNET
ENCLOSURE ASSEMBLY

MATERIAL SEE PARTS LIST
SCALE 1:2
SHEET OF
SIZE E
DRAWING NUMBER 31010503-770000