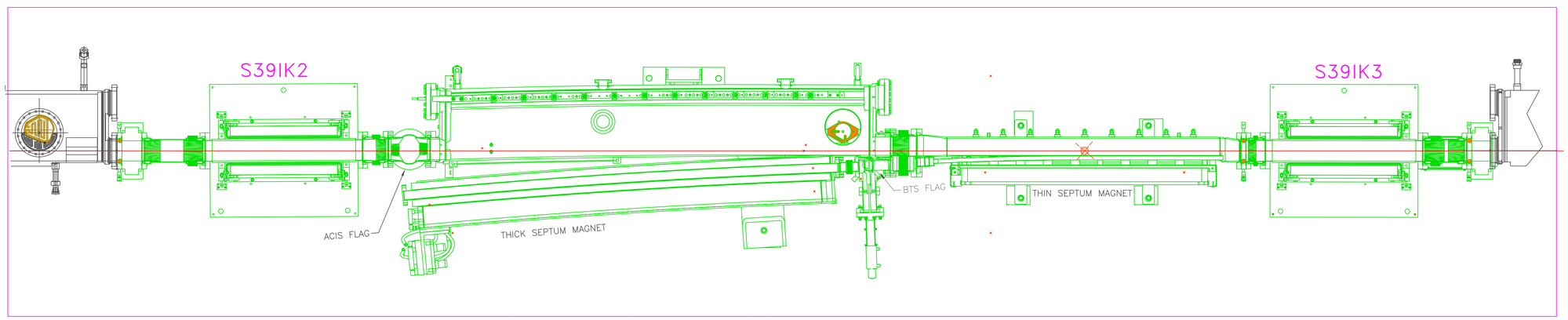

SECTOR 39; SECTION 6
INJECTION STRAIGHT