MAGNET NO: S39IKZ

FIDUCIALIZATION OF KICKER (CENTER OF FERRITE)

SWP

2/24/2002

Ceramic Chamber No. K-~~005~~ K006

FIDUCIAL	X	Y	Z
A	10.476"	-5.212"	-11.768"
B	10.523"	-5.218"	11.737"
C	-10.535"	-5.218"	-11.735"
D	-10.477"	-5.212"	11.758"

NOTE: INSTALLED K-006 CHAMBER AFTER FIDUCIALIZING

ARS/SVY ALIGN KILLER CHAMBER 8-5-02 GT RD

NOTE: NUMBERS TO ℄ T/BALL

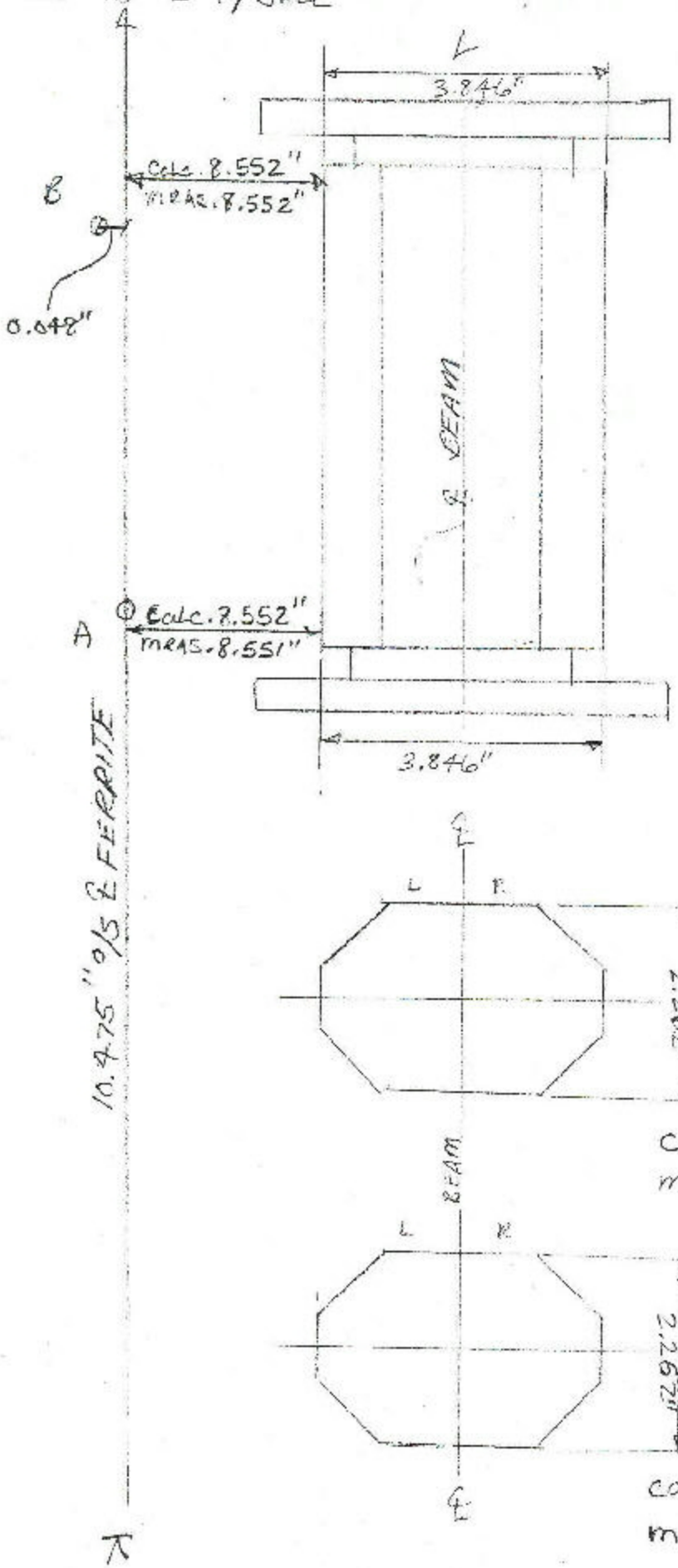

ELEVATION
FERRITE ASBUILT

UP-L = 0.000"

UP-R = +0.002"

DN-L = +0.002"

DN-R = 0.000"

ROUGH FERRITE
LATERAL

OS + 0.004"

UP +0.014"

A @ ABOVE FIDUCIAL "C"
12.700"

UPSTREAM
Looking
DOWN

	right	Left
calc:	6.351"	6.351"
meas.	6.352"	6.351"

DOWNSTREAM
Looking
DOWN

	right	Left
calc.	6.351"	6.351"
meas.	6.349"	6.348"

APS/SVK | FIDUCIALIZE KICKER IRON FERRITE | 7-23-02 S.P.

NOTE: MEASUREMENTS TO ℄ T/BALL

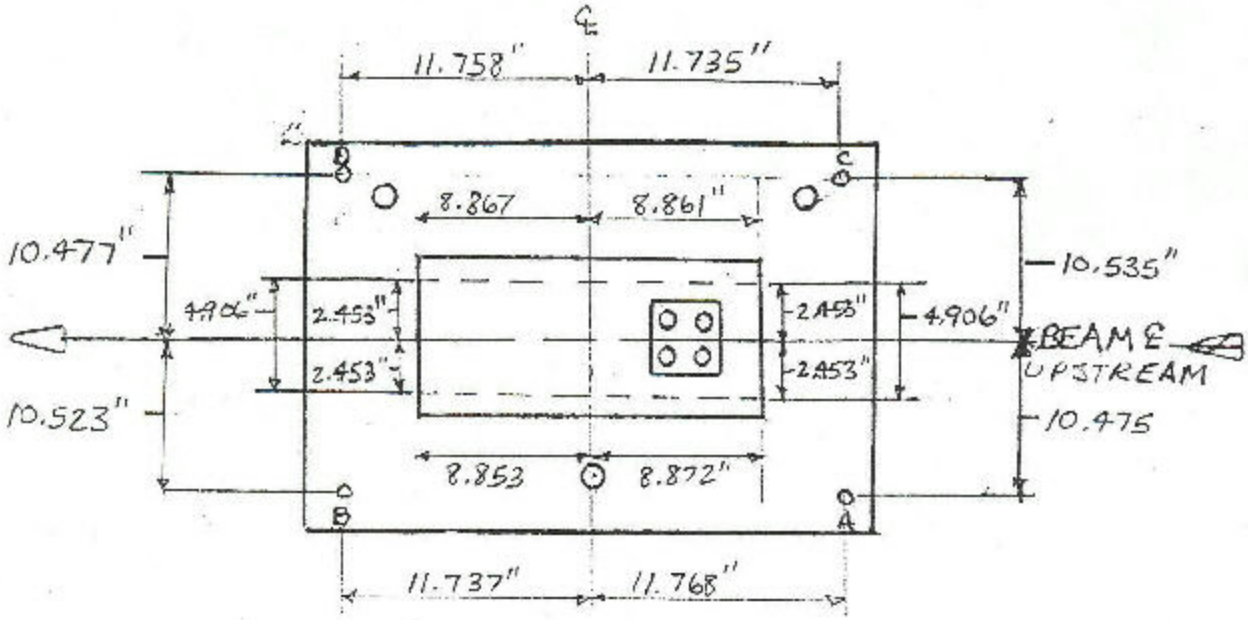

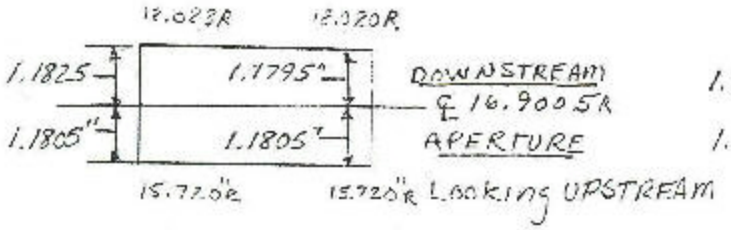

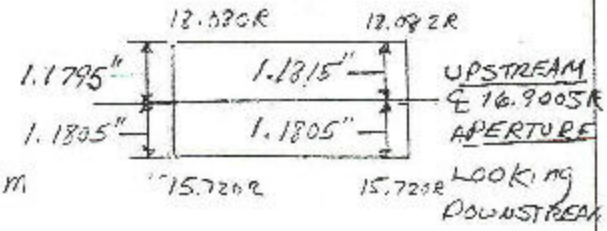

ELEVATION OF FIDUCIAL TO ℄ APERTURE

A -5.212"

B -5.218"

C -5.218"

D -5.212"