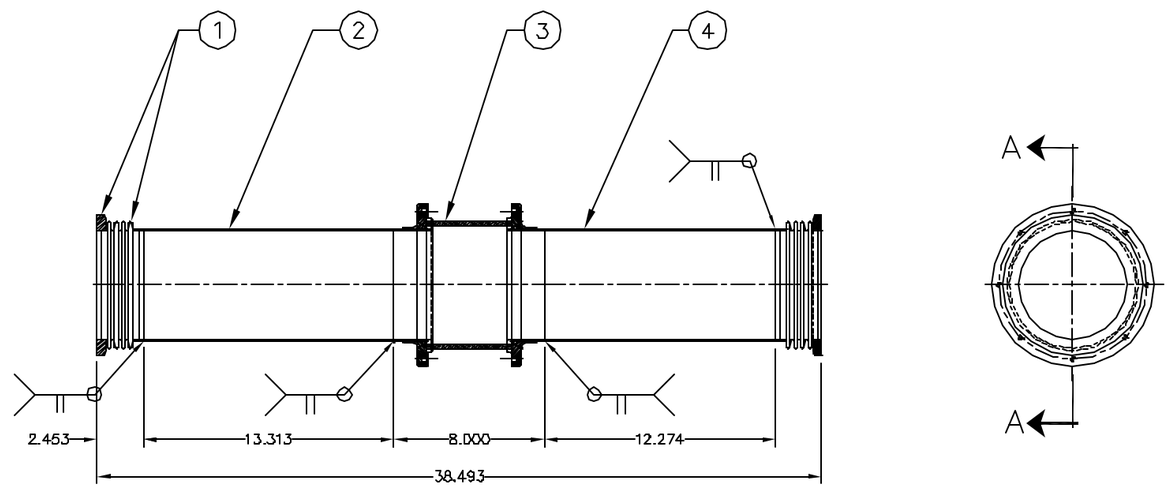

SECTION A—A

NOTES:

1) WELD JOINTS MUST BE VACUUM LEAK TIGHT. NO LEAK SHOULD BE DETECABLE USING THE MOST SENSITIVE SCALE OF A HELIUM MASS SPECTROMETER WITH A MINIMUM SENSITIVITY OF 1.5 X 10^{-10} TORR-LITER/SECOND OF HELIUM OR BETTER.

ITEM	DWG/PART NUMBER	NOMENCLATURE OR DESCRIPTION	MATERIAL / SPEC	QTY
4	25040101-150102	6.0 OD BEAM TUBE – SECTION 2	STN. STL.	1
3	25040101-200100	CERAMIC SUBASSEMBLY		1
2	25040101-150103	6.0 OD BEAM TUBE – SECTION 1	STN. STL.	1
1	250305-00001	BELLOWS EVAC FLANGE SUBASSEMBLY		2

PARTS LIST

SYM	CHANGE DESCRIPTION	BY	CHKD	DATE

REVISIONS

UNLESS OTHERWISE SPECIFIED: ALL DIMENSIONS ARE IN INCHES
TOLERANCES:
DECIMALS: .X ±.1, .XX ±.02, .XXX ±.005
ANGULAR: ±.25°
SURFACE ROUGHNESS 125
REMOVE ALL BURRS AND BREAK SHARP EDGES .06 MAX.
SURFACE TEXTURE TO BE IN ACCORDANCE WITH LATEST ANSI B46.1
DIMENSIONS & TOLERANCES IN ACCORDANCE WITH LATEST ANSI Y14.5
DO NOT SCALE DRAWING

LOG NUMBER A1434900

THIS DRAWING IS THE PROPERTY OF ARGONNE NATIONAL LABORATORY

		DATE
DRAWN BY	L.MORRISON	11-3-93
CHECKED BY		
DESIGNER	MORRISON LEONARD	
RESPONSIBLE ENGINEER	PRIMDAHL KEITH	
OP LEADER		
PROJECT MGR		
APPROVED/RELEASED		

TITLE
ADVANCED PHOTON SOURCE
ACCELERATOR SYSTEMS DIVISION
12TH HARMONIC CAVITY
BEAM TUBE
SUBASSEMBLY

MATERIAL SEE PARTS LIST

SCALE 1:4 SHEET 1 of 1 SIZE D

DRAWING NUMBER 25040102-150200