(E)	PLOT SCALE:1=4.0	DWG. SCALE:4.0	A24B0500

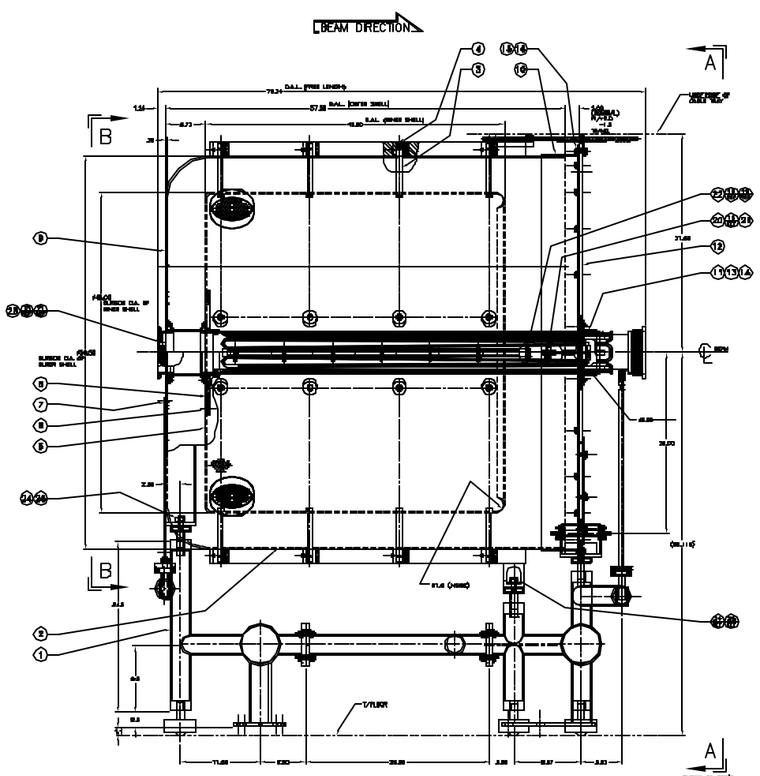

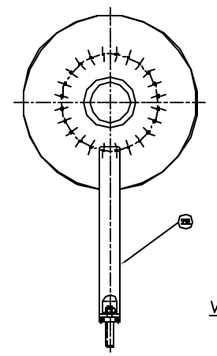

VIEW B–B

20	2504D101-540020	UPSTREAM DAMPER SUPPORT		1
27		A.M.S. .38 HEX NUT	BR1	4
26		A.S.S. .38 X 1.25 LG. DOG. HS. CUP SCR.	BR1	4
23		P.S.S. .13 HEX NUT	BR1	4
24		S.W. STL. FLAT WASHER	BR1	3
25		A.S.C.S. .13 X 2.75 LG. SOC. HS. CUP SCR.	BR1	4
22		A.S.S. .13 X 1.75 LG. SOC. HS. CUP SCR.	BR1	14
21		A.S.S. .13 HEX NUT	BR1	8
29		A.S.S. .13 X 1.25 LG. DOG. HS. CUP SCR.	BR1	4
19		P.S.S. .13 HEX NUT	BR1	36
18		S.W. STL. FLAT WASHER	BR1	24
17		A.S.S. .13 X 2.75 LG. SOC. HS. CUP SCR.	BR1	18
16		A.S.C.S. .13 X .75 LG. HEX SO. CUP SCR.	BR1	24
15		A.S.C. STL. FLAT WASHER	BR1	36
14		A.S.S. .38 X .75 LG. HEX SO. CUP SCR.	BR1	20
13		A.S.C. STL. FLAT WASHER	BR1	34
12	2504D101-540070	END CAP		1
11	2504D101-540080	DOWNSTREAM SCRUBBER SLAMP		1
10	2504D101-540090	CLAMPING COLLAR		1
9	2504D101-540000	UPPER SHELL WELDMENT		1
8		A.S.S. .38 X .38 LG. S.H.S.S. S.P.H. HEX	BR1	36
7		A.N.S. .34 X .38 LG. SOC. HS. CUP SCR.	BR1	36
6	2504D101-540100	VACUUM DAMPER / SCRUBBER ASS'L.		1
5	2504D101-540110	INNER SHELL WELDMENT		2
4		A.S.C.S. .13 X .38 LG. SOC. SET SCR.	BR1	24
3	2504D101-540120	CLAMP-OFF		24
2	2504D101-540130	LOWER SHELL WELDMENT		1
1	2504D101-540140	TRAVEL ASSEMBLY		1

PART NO. / SER NUMBER	DESCRIPTION	MATERIAL	QTY

SPECIFICATION	MATERIAL	
DRAWN		
CHECKED		
ENGINEERING		
MANUFACTURING		
QUALITY ASSURANCE		
SEC PARTS LIST		
APPROVED		

ARGONNE NATIONAL LABORATORY
ARGONNE, ILLINOIS 60439-4815

INJECTOR POSITION ACCUMULATOR RING
INJECTOR POSITION ACCUMULATOR RING
FOR PF SYSTEM
FUNDAMENTAL TECHNOLOGY DIVISION
FUNDAMENTAL TECHNOLOGY GROUP

SIZE	CAGE CODE	DWG NO.	REV
A	04844	2504D101-540000	00

SCALE: 1/4 | SHEET 1 OF 2

A24B0500

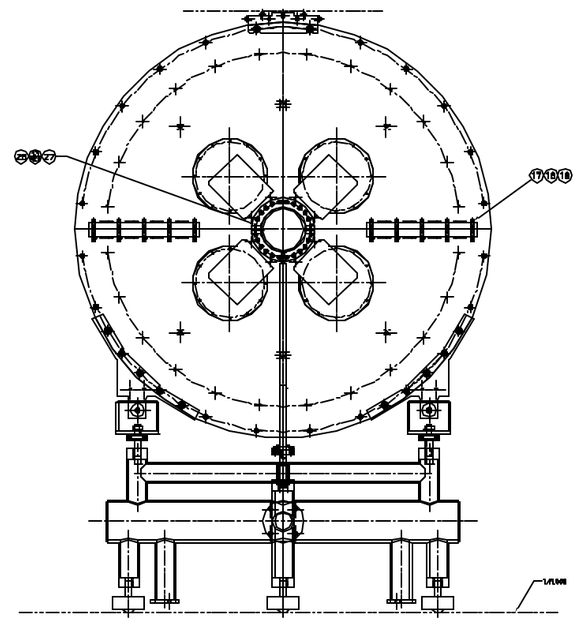

VIEW A–A

FROM DRWG. #2504D101-540000
SH'T.# 1 OF 2

SPECIFICATION	MATERIAL	
DRAWN		
CHECKED		
ENGINEERING		
MANUFACTURING		
QUALITY ASSURANCE		
SEC PARTS LIST		
APPROVED		

ARGONNE NATIONAL LABORATORY
ARGONNE, ILLINOIS 60439-4815

INJECTOR POSITION ACCUMULATOR RING
INJECTOR POSITION ACCUMULATOR RING
FOR PF SYSTEM
FUNDAMENTAL TECHNOLOGY DIVISION
FUNDAMENTAL TECHNOLOGY GROUP

SIZE	CAGE CODE	DWG NO.	REV
A	04844	2504D101-540000	00

SCALE: 1/4 | SHEET 2 OF 2

A24B0500