END USE	USED ON	QTY
25040101-570109	25040101-570109	1

REVISIONS

ZONE	REV	DESCRIPTION	BY	APPROVED	DATE

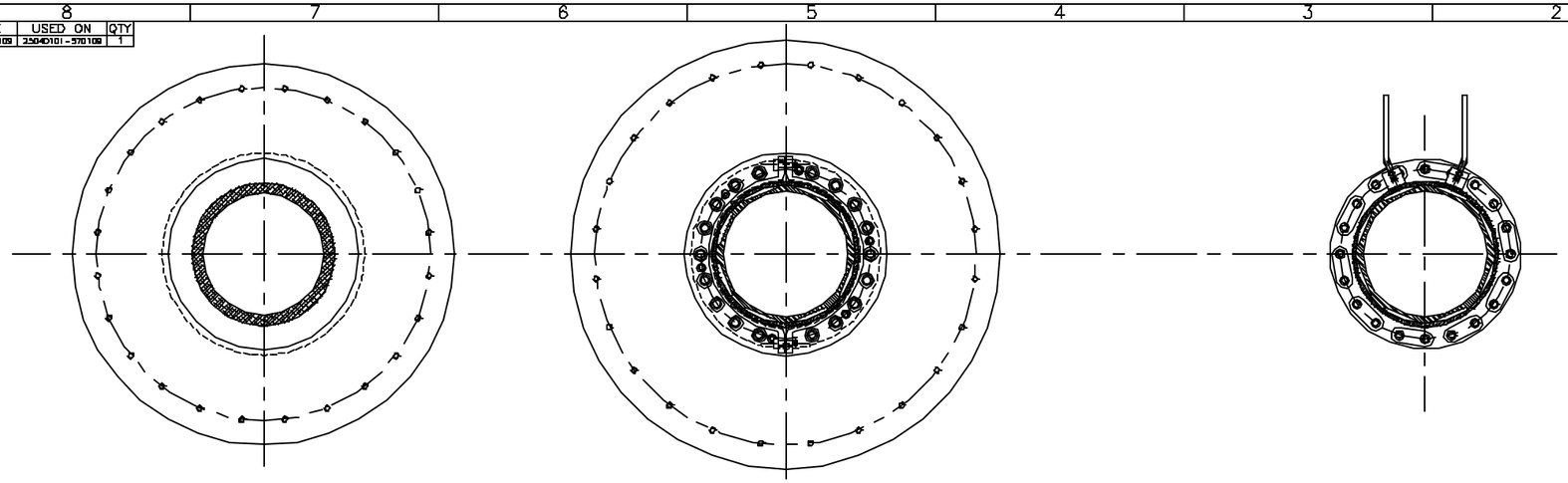

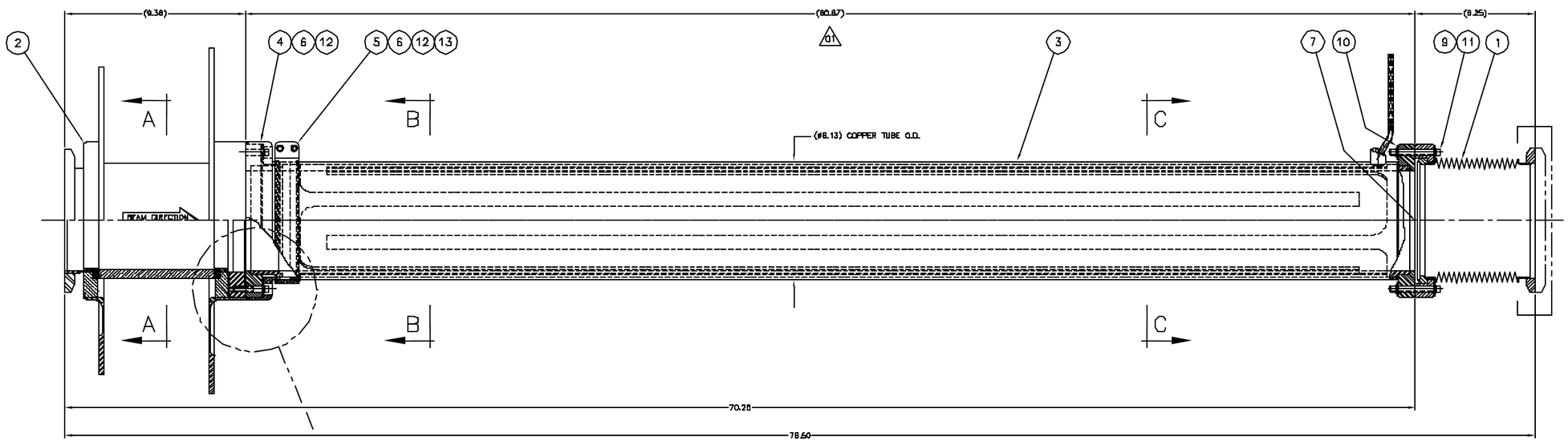

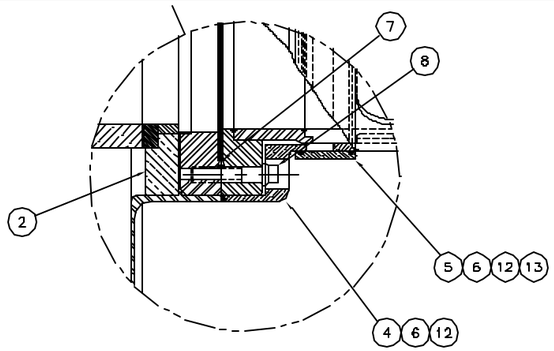

SCALE: 2x

1 SOURCE:
NDC VACUUM PRODUCTS CORP.
23942 CARGOT BLVD
HAYWARD, CA 94543-1631
TEL (800)-443-8817
FAX (510)-887-0826

2 SOURCE:
DUNWAY STOCKROOM CORP.
1305 SPACE PARK WAY
MOUNTAIN VIEW, CA 94043-1336
TEL 850-989-8811
FAX 850-989-0764

3 SOURCE:
McMASTER CARR
500 COUNTY LINE RD
ELMHURST, IL 60126-2081
TEL 630-833-0300

4 SOURCE:
BALSEAL ENGINEERING
19650 PAULING
FOOTHILL RANCH, CA 92610
949-460-2100

13		#1/4-20 HEX NUT	SST	4
12		#1/4-20 x .78 LG S.H.C.S.	SST	10
11	9801QA385	WASHER .31 NOM X .60 OD X .065 THK	SST	20
10	1B0074	PLATE NUT 5/16-24 UNF-2B	SST	10
9	SB-24-225	12PT HD 5/16-24 UNF-3A X 2.25 LG	SST/SILVER PLT	40
8	SB-24-150	12PT HD 5/16-24 UNF-3A X 1.50 LG	SST/SILVER PLT	40
7	1B1017	VACUUM FLANGE GASKET #8.00	COPPER	2
6	RF104LB-BEC-2	RF SPRING (LENGTH AS REQD)	BERYLLIUM COPPER	3
5	25040101-420019	RF COPPER STRAP		2
4	25040101-570107	RF COPPER FLANGE		1
3	25040101-420009	VACUUM BEAM TUBE ASSEMBLY		1
2	25040101-570309	CERAMIC FLANGE WELDMENT ASSEMBLY		1
1	25040101-570251	BELLOWS ASSEMBLY #8.00		1
ITM	PRS/PART NUMBER	NOMENCLATURE OR DESCRIPTION	MATERIAL / SPEC	QTY

PARTS LIST

REV	SEE DCN NO.	ALB	
D2	SEE DCN NO. 010318-01	ALB	
01	SEE DCN NO. 980202-01	CRP	03/03/98
ITM	CHANGE DESCRIPTION	BY	CKD	DATE

REV BLOCK

ALL PRECISION AND TOLERANCE DIMENSIONS ARE IN METRIC UNLESS OTHERWISE SPECIFIED

DRAWN BY A. BARDKOWSKI 08/28/98
CHECKED BY D. MANGRA 07/01/98
DESIGNED BY A. BARDKOWSKI 08/28/98
APPROVED BY E. ROTELA 07/01/98

A2672902

THIS DRAWING IS THE PROPERTY OF ARGONNE NATIONAL LABORATORY

JOB NUMBER
S. SHARMA 07/01/01
WO NUMBER
PROJECT NO.
APPROVED/ANSCHED

TITLE
ADVANCED PHOTON SOURCE
INJECTOR PAR
1ST HARMONIC CAVITY
BEAM TUBE ASSEMBLY
FUNDAMENTAL
FREQUENCY CAVITY

SCALE 1:2 | SIZE E | DRAWING NUMBER 25040101-570109