(D)	PLOT SCALE:1-2.0	DWG. SCALE:2.0	A2567501

REVISIONS					
ZONE	REV	DESCRIPTION	BY	APPROVED	DATE
	1	SEE DCN NO. 980106-04	RHP		980129

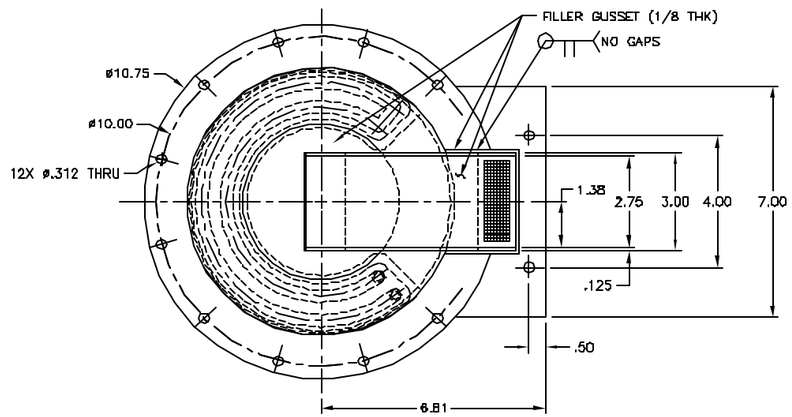

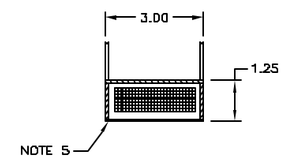

SECTION A-A
SCALE: 2:1

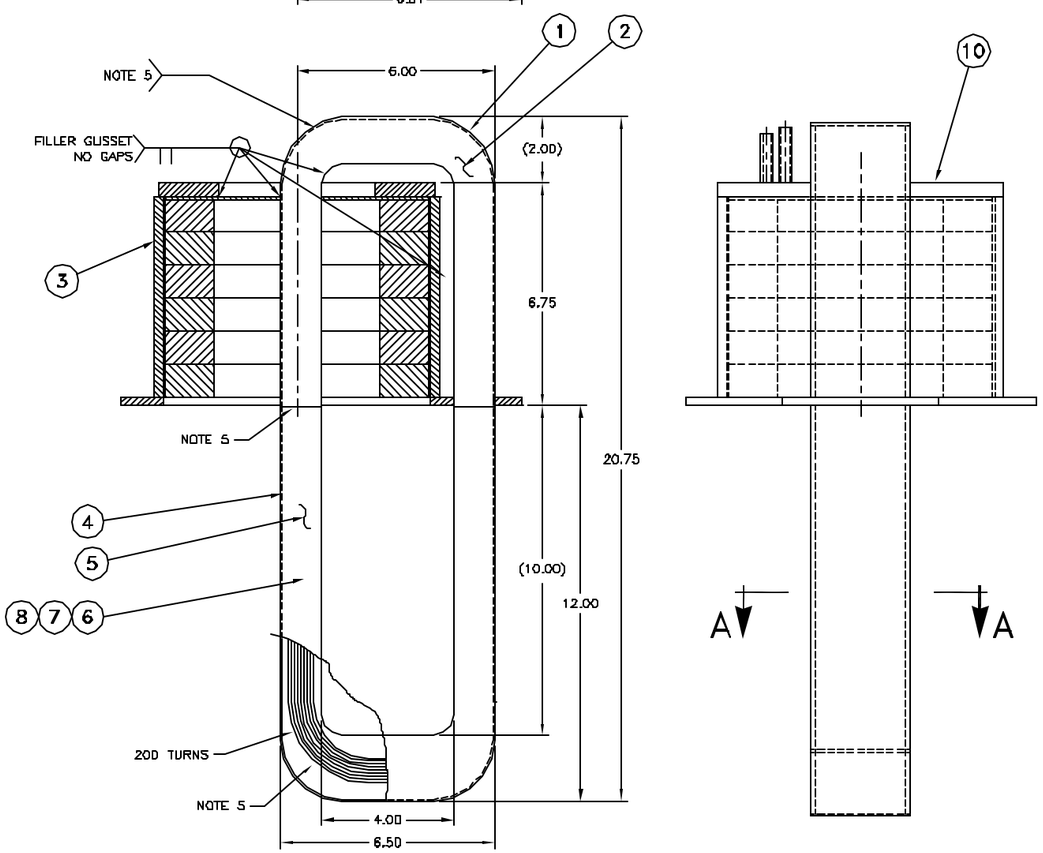

NOTES:

1. USE COIL ROLLING FIXTURE #25040101-601000 TO WIND THE COIL STRAND (.094 SQ.) THRU IT. # 1.
2. USE COIL FORMING FIXTURE #25040101-600000 TO SHAPE THE COIL AS SHOWN ON THIS DRAWING.
3. ASSEMBLE ALL THE COMPONENTS INDICATED IN THE BILL OF MATERIAL.
4. BILL OF MATERIAL DOES NOT REFLECT ACTUAL ASSEMBLY
5. SUB-ASSEMBLIES ARE NOT UPDATED.
6. 208 TURNS OF .090 X .090 WIRE WITH .002 INSUL , 8 X 26 RATED TO 200 C°
7. SILFOS SOLDER HOUSING.
8. ALL WELDED EXCEPT FOR SILFOSS

ITEM	DRAWING / PART NUMBER	NOMENCLATURE OR DESCRIPTION	MATERIAL / SPEC	QTY
10	25040101-401006	WATER MANIFOLD		1
9				1
8		FLAT WASHER #6 ST'D.	SST	16
7		#6-32 x .38 LG. SOC. H'D. CAP SCR.	SST	16
6	25040101-401005	INNER SKIN		1
5	25040101-401004	LOWER SIDE PLATE		1
4	25040101-401003	LOWER ENCLOSURE		1
3	25040101-401100	TUNER FERRITE SUB-ASSEMBLY		1
2	25040101-401002	UPPER SIDE PLATE		1
1	25040101-401001	UPPER ENCLOSURE		1

PARTS LIST / BILL of MATERIALS

UNLESS OTHERWISE SPECIFIED: ALL DIMENSIONS ARE IN INCHES
TOLERANCES
DECIMALS: .X ±.1, .XX ±.01, .XXX ±.005
ANGULAR: ±.5°
SURFACE ROUGHNESS: 125
REMOVE ALL BURRS AND BREAK SHARP EDGES .03 MAX.
SURFACE TEXTURE TO BE IN ACCORDANCE WITH LATEST ANSI B46.1
DIMENSIONING & TOLERANCING IN ACCORDANCE WITH LATEST ANSI Y14.5

MATERIAL: SEE PARTS LIST
ELECTRONIC FILE NAME: A2567501

DRAWN BY: P.BELKO — DATE: 11/6/96
CHECKED BY: — DATE:
DESIGNED BY: PIECH RICHARD H. — DATE: 11/6/96
RESPONSIBLE ENGINEER: SHENG I-CHING — DATE:
GROUP LEADER: — DATE:
APPROVED BY: — DATE:
APPROVED BY: — DATE:
APPROVED BY: — DATE:

THIS DRAWING IS THE PROPERTY OF
ARGONNE NATIONAL LABORATORY
ADVANCED PHOTON SOURCE

TITLE:
ACCELERATOR SYSTEMS DIVISION
INJECTOR POSITRON ACCUMULATOR RING
PAR RF SYSTEM
FUNDAMENTAL FREQUENCY RF SYSTEM
FUNDAMENTAL FREQ. CAVITY 1ST HARM. CAV.

SIZE: D | FORM No.: 0HRH5 | DRAWING NUMBER: 25040101-401000 | REV.: 01
SCALE: 1:2 | DO NOT SCALE DRAWING | SHEET: 1 of 1