B

A

SECTION B-B

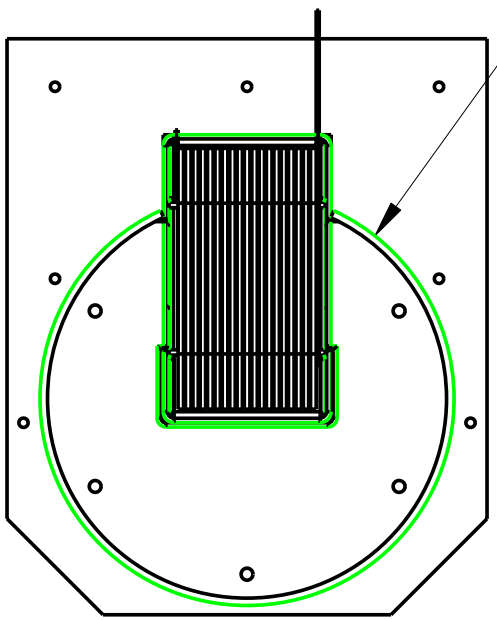

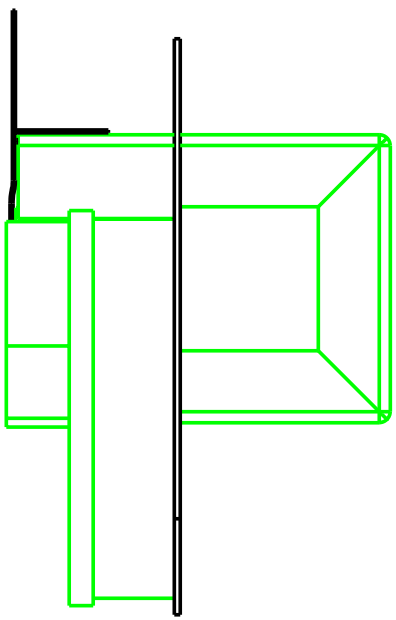

1ST WELDING
SCALE 1:4

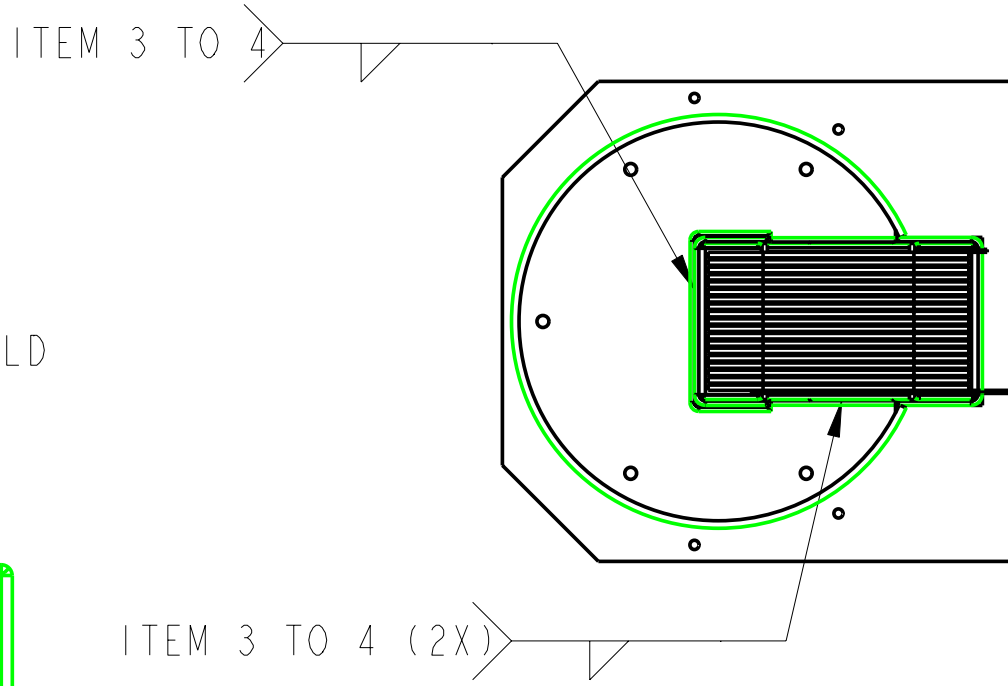

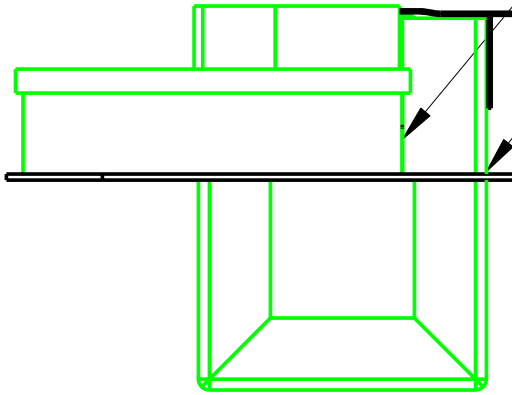

2ND WELDING
SCALE 1:4

6 | 5