| (D) | PLOT SCALE:1=2.0 | DWG. SCALE:2.0 | A2567501 |
|---|---|---|---|

| REVISIONS | | | | | |
|---|---|---|---|---|---|
| ZONE | REV | DESCRIPTION | BY | APPROVED | DATE |
| | 1 | SEE DCN NO. 980106-04 | RHP | | 980129 |

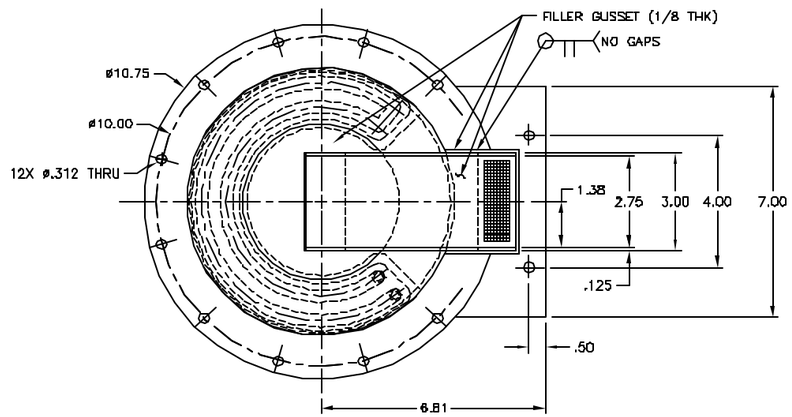


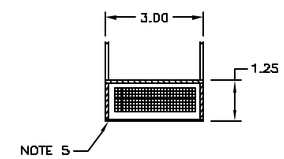


SECTION A-A
SCALE: 2:1

Fundamental cavity tuner Photograph

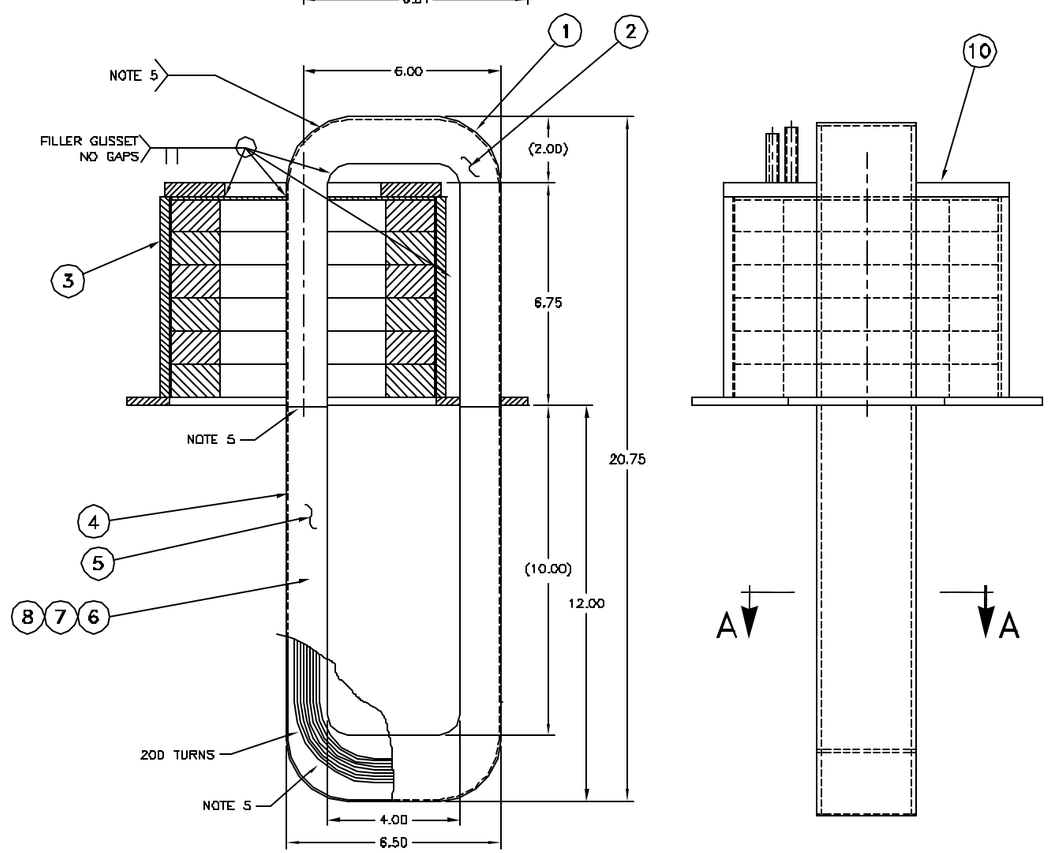


NOTES:

1. USE COIL ROLLING FIXTURE #25040101-601000 TO WIND THE COIL STRAND (.094 SQ.) THRU IT. # 1.
2. USE COIL FORMING FIXTURE #25040101-600000 TO SHAPE THE COIL AS SHOWN ON THIS DRAWING.
3. ASSEMBLE ALL THE COMPONENTS INDICATED IN THE BILL OF MATERIAL.
4. BILL OF MATERIAL DOES NOT REFLECT ACTUAL ASSEMBLY
5. SUB-ASSEMBLIES ARE NOT UPDATED.
6. 208 TURNS OF .090 X .090 WIRE WITH .002 INSUL . 8 X 26 RATED TO 200 C°
7. SILFOS SOLDER HOUSING.
8. ALL WELDED EXCEPT FOR SILFOSS

| ITEM | DRAWING / PART NUMBER | NOMENCLATURE OR DESCRIPTION | MATERIAL / SPEC | QTY |
|---|---|---|---|---|
| 10 | 25040101-401006 | WATER MANIFOLD | | 1 |
| 9 | | | | 1 |
| 8 | | FLAT WASHER #8 ST'D. | SST | 18 |
| 7 | | #6-32 x .38 LG. SOC. H'D. CAP SCR. | SST | 16 |
| 6 | 25040101-401005 | INNER SKIN | | 1 |
| 5 | 25040101-401004 | LOWER SIDE PLATE | | 1 |
| 4 | 25040101-401003 | LOWER ENCLOSURE | | 1 |
| 3 | 25040101-401100 | TUNER FERRITE SUB-ASSEMBLY | | 1 |
| 2 | 25040101-401002 | UPPER SIDE PLATE | | 1 |
| 1 | 25040101-401001 | UPPER ENCLOSURE | | 1 |

PARTS LIST / BILL of MATERIALS

UNLESS OTHERWISE SPECIFIED: ALL DIMENSIONS ARE IN INCHES
TOLERANCES
DECIMALS: X ±1, XX ±.01, XXX ±.005 — ANGULAR ±.5°
SURFACE ROUGHNESS: 125
REMOVE ALL BURRS AND BREAK SHARP EDGES .03 MAX.
SURFACE TEXTURE TO BE IN ACCORDANCE WITH LATEST ANSI B46.1
CONFORMS TO TOLERANCES IN ACCORDANCE WITH LATEST ASME Y14.5
MATERIAL: SEE PARTS LIST
ELECTRONIC FILE NAME: A2567501

| | | |
|---|---|---|
| DRAWN BY: P.BELKO | DATE: 11/6/96 | |
| DESIGNED BY: PIECH RICHARD H. | DATE: 11/6/96 | |
| RESPONSIBLE ENGINEER: SHENG I-CHING | DATE | |
| GROUP LEADER: | DATE | |
| APPROVED BY: | DATE | |
| APPROVED BY: | DATE | |
| APPROVED BY: | DATE | |

THIS DRAWING IS THE PROPERTY OF
ARGONNE NATIONAL LABORATORY
ADVANCED PHOTON SOURCE

TITLE:
ACCELERATOR SYSTEMS DIVISION
INJECTOR POSITRON ACCUMULATOR RING
PAR RF SYSTEM
FUNDAMENTAL FREQUENCY RF SYSTEM
FUNDAMENTAL FREQ. CAVITY 1ST HARM. CAV.

| SIZE | FORM No. | DRAWING NUMBER: | REV. |
|---|---|---|---|
| D | DHRH5 | 25040101-401000 | 01 |

SCALE: 1:2 — DO NOT SCALE DRAWING — SHEET 1 of 1