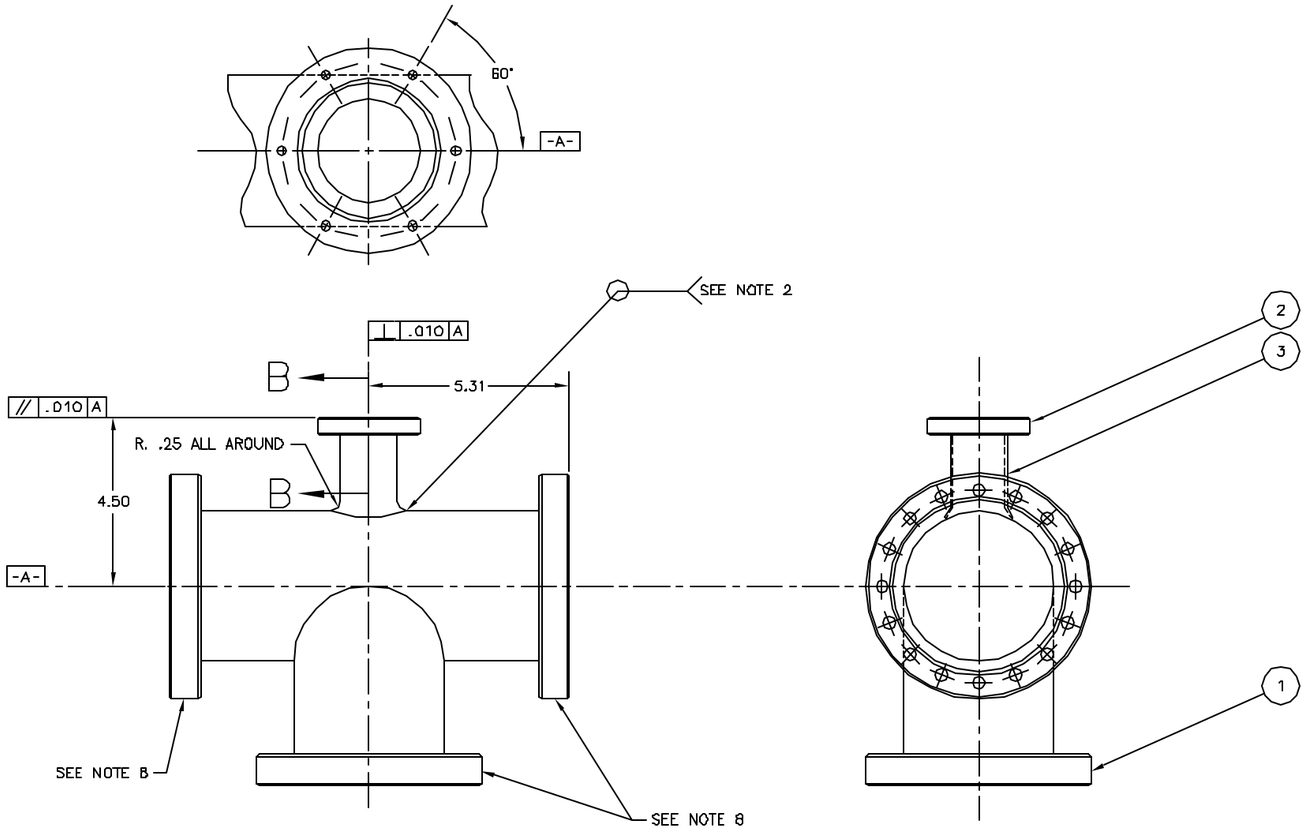


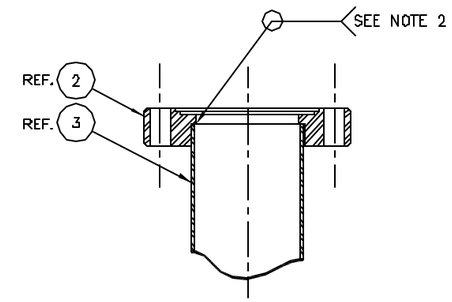


SECTION B–B

SCALE 1–1

## SOURCE:

1 MDC VACUUM PRODUCTS CORPORATION
23842 CABOT BOULEVARD
HAYWARD, CA. 94545–1651
(800)–443–8817

NOTES:

1. WELD PREP IN ACCORDANCE WITH MATERIAL THICKNESS.
2. ALL WELDS MUST BE VACUUM TIGHT. NO LEAK SHALL BE DETECTABLE ON THE MOST SENSITIVE SCALE OF A HELIUM LEAK DETECTOR, WITH A MIN. SENSITIVITY OF $10^{-10}$ ATM CC/SEC OR BETTER.
3. ALL WELDS INTERNAL OR FULL PENETRATION USING THE INERT–GAS TUNGSTEN–ARC WELDING PROCESS.
4. CHEMICAL CLEAN FINISHED PRODUCT:
   a. ALKALINE CLEAN
   b. ELECTROPOLISH (ENSURE PROTECTION FOR KNIFE EDGES)
   c. RINSE IN DE–IONIZED WATER.
5. PROTECT FLANGES WITH CONFLAT COVERS OR APPROVED ALTERNATE METHODS.
6. ALL WELDS TO BE PERFORMED IN CLEAN ROOM CONDITIONS.
7. USE SPECIFIED PURCHASE PART OR APPROVED EQUIVALENT
8. MANUFACTURE FROM MDC REF."600–3–SPECIAL" ALL ø 6.00 FLANGES ARE ROTATABLE

| ITEM | DWG. & ELECTRONIC FILE No. | NOMENCLATURE OR DESCRIPTION | MATERIAL / SPEC | QTY |
|---|---|---|---|---|
| 3 | | TUBING, 1.50 OD.X.049 W.X SEE DWG. | SST. 304 | 1 |
| 1 2 | | FLANGE, 2.75 NON–ROTATABLE MDC. | 110014 | 1 |
| 1 1 | | TEE, VACUUM MDC. SEE NOTE 8 | 600–3 | 1 |

PARTS LIST

| SYM | CHANGE DESCRIPTION | BY | CHKD | DATE |
|---|---|---|---|---|
| | | | | |

REVISIONS

UNLESS OTHERWISE SPECIFIED: ALL DIMENSIONS ARE IN INCHES
TOLERANCES
DECIMALS: X ±.015, XX ±.010, XXX ±.005
ANGULAR ±.25°
SURFACE ROUGHNESS 250√
REMOVE ALL BURRS AND BREAK SHARP EDGES .03 MAX.
SURFACE TEXTURE TO BE IN ACCORDANCE WITH LATEST ANSI B46.1
DIMENSIONING & TOLERANCING IN ACCORDANCE WITH LATEST ANSI Y14.5
DO NOT SCALE DRAWING

ELECTRONIC FILE NUMBER: A06894

THIS DRAWING IS THE PROPERTY OF ARGONNE NATIONAL LABORATORY

| | | | |
|---|---|---|---|
| DRAWN BY B.BABCOCK | DATE 8/92 | GP LEADER | DATE |
| CHECKED BY | DATE | PROJECT MGR | DATE |
| RESPONSIBLE ENGINEER | DATE | APPROVED/RELEASED | DATE |

TITLE: ADVANCED PHOTON SOURCE SYNCHROTRON RF SECTION MODIFIED TEE

MATERIAL: SEE B.O.M.
SCALE 1=2
SHEET 1 of 1
SIZE D
DRAWING NUMBER 220401–00061–00