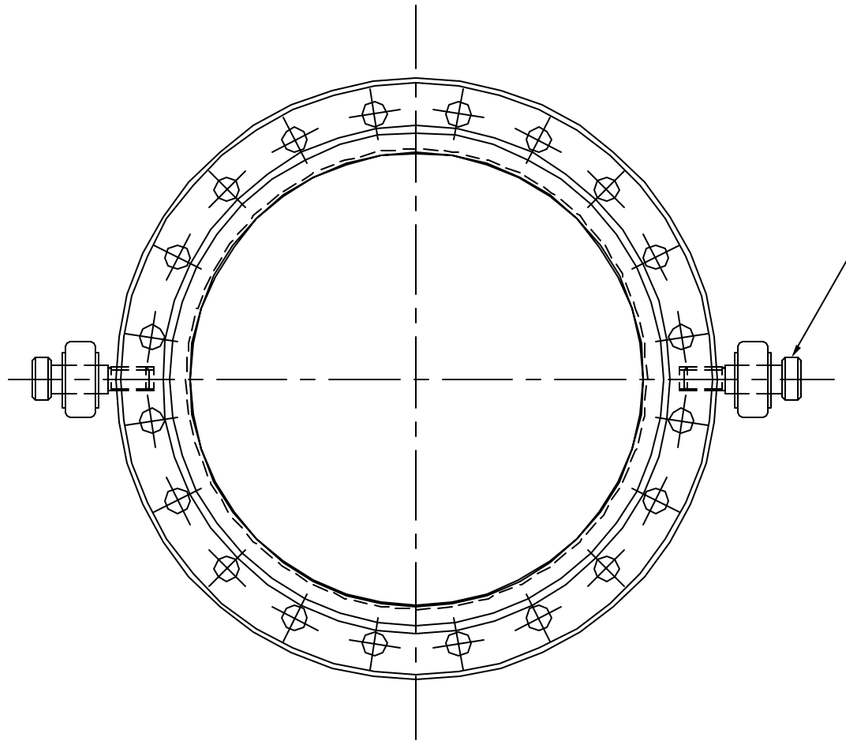

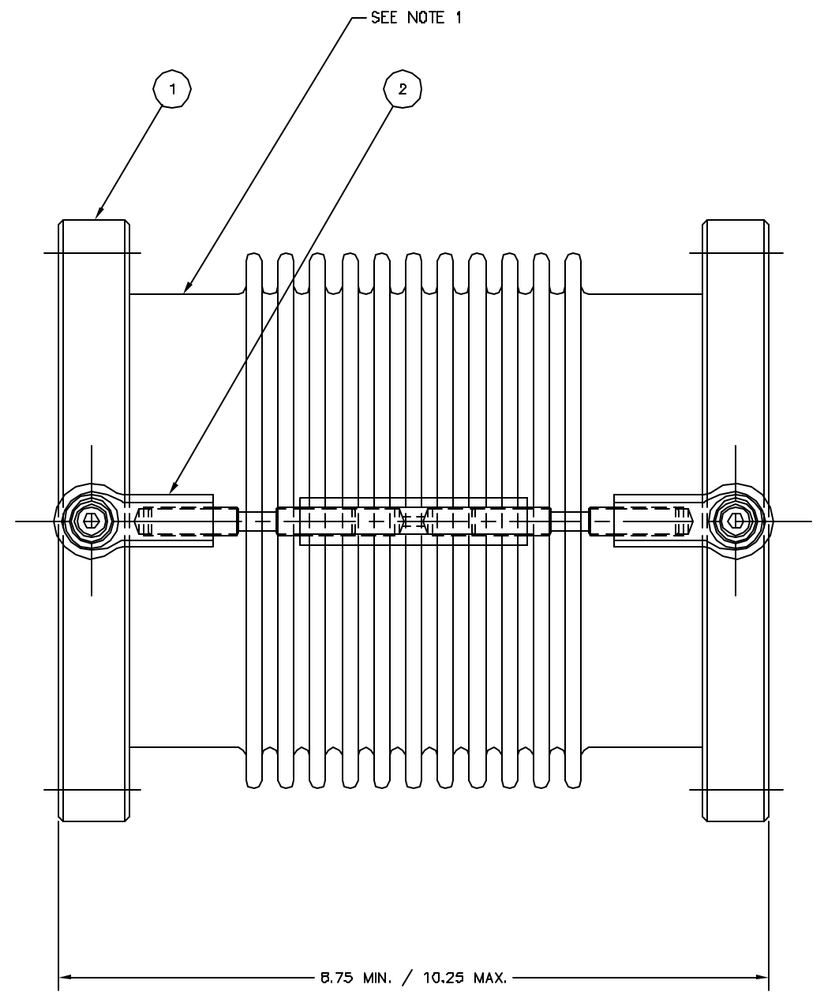

NOTES:

1. BELLOWS IS SHOWN IN MIDDLE POSITION
2. ALL WELDS TO BE VACUUM TIGHT, NO LEAK SHALL BE DETECTABLE ON THE MOST SENSITIVE SCALE OF A HELIUM LEAK DETECTOR, WITH A MIN. SENSITIVITY OF 10^{-10} ATM CC/SEC OR BETTER.

D1

ITEM	DWG. & ELECTRONIC FILE No.	NOMENCLATURE OR DESCRIPTION	MATERIAL / SPEC	QTY
3		SH.S.H.C.S. 5/16-18UNC-3A X.75 LG.	SILVER PLATED STAINLESS, STL.	4
2	2204D1-00049-00	LOCKDOWN, ION PUMP	SEE DWG.	2
1	2204D1-00034-00	ION PUMP BELLOWS	SEE DWG.	1

PARTS LIST

SYM	CHANGE DESCRIPTION	BY	CHKD	DATE
D1	SEE DCN #94031B-05	LHM		3/94

REVISIONS

UNLESS OTHERWISE SPECIFIED: ALL DIMENSIONS ARE IN INCHES
TOLERANCES:
DECIMALS: X ±.015, XX ±.010, XXX ±.005
ANGULAR: ±.25°
SURFACE ROUGHNESS 250√
REMOVE ALL BURRS AND BREAK SHARP EDGES .03 MAX.
SURFACE TEXTURE TO BE IN ACCORDANCE WITH LATEST ANSI B46.1
DIMENSIONS & TOLERANCING IN ACCORDANCE WITH LATEST ANSI Y14.5
DO NOT SCALE DRAWING

ELECTRONIC FILE NUMBER: A17233

THIS DRAWING IS THE PROPERTY OF ARGONNE NATIONAL LABORATORY

DRAWN BY: B. BABCOCK	DATE: 7/92	GP LEADER	DATE
CHECKED BY	DATE	PROJECT MGR	DATE
RESPONSIBLE ENGINEER	DATE	APPROVED/RELEASED	DATE

TITLE: ADVANCED PHOTON SOURCE
SYCHROTRON
RF SECTION
ION PUMP BELLOWS ASSEMBLY

MATERIAL: SEE B.O.M.
SCALE: 1=1
SHEET: 1 OF 1
SIZE: D
DRAWING NUMBER: 220401-00050-01