| MATERIAL | FINISH | PLATING | SPECIFICATION | USED ON |
|---|---|---|---|---|
| SEE DESCRIPTION | AS ASSEMBLED | | | |

| | ITEM | DESCRIPTION | QTY | DRAWING |
|---|---|---|---|---|
| 1 | DOME | 99% MIN ALUMIN. | 1 | |
| 2 | TUBE | 70/30 CUNI | 1 | |
| 3 | ADAPTER | 304 STN STL | 1 | |
| 4 | FLANGE | 304 STN STL | 1 | |

NOTES:
1- ASSEMBLY TO BE LEAK TESTED AT $1X10^{-9}$ ATM cc/sec HELIUM.
WE WILL GUARANTEE ASSEMBLIES TO BE LEAK TIGHT AT $1X10^{-9}$ ATM cc/sec HELIUM.
2- CLEAN FOR VACUUM SERVICE PRIOR TO PACKAGING.
3- PROTECT ELECTROPOLISHED FINISH ON ITEM #2 TUBE.

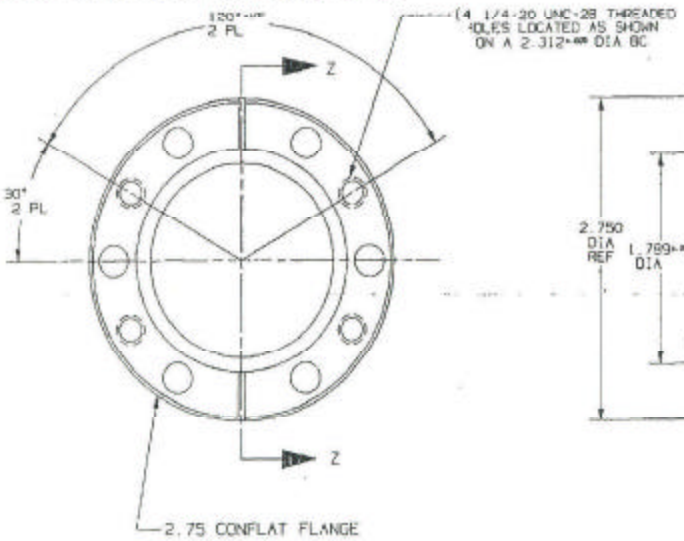


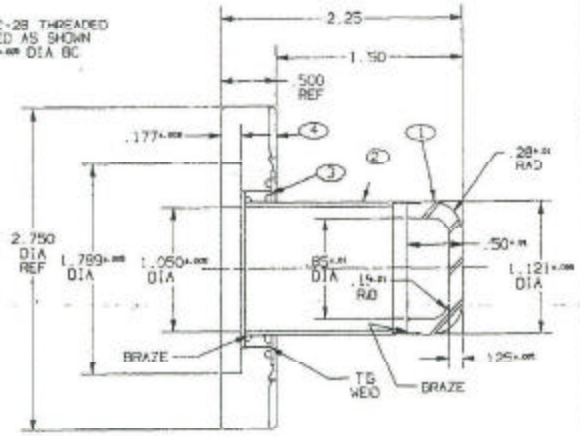


SECTION Z-Z

THIS DRAWING IS THE PROPERTY OF CERAMASEAL AND IS SUBMITTED TO CONFIDENTIAL FOR USE IN CONNECTION WITH THE QUOTATION, ORDER OR CONTRACT FOR WHICH IT IS SUBMITTED. IT IS NOT TO BE REPRODUCED OR DISTRIBUTED OUTSIDE YOUR ORGANIZATION WITHOUT THE WRITTEN PERMISSION FROM CERAMASEAL. COPIES OF THIS DRAWING TO BE SUPPLIED TO SUBCONTRACTORS FOR QUOTATION OR FABRICATION IS PERMITTED TO CONSTITUTE PUBLICATION OF SAME.

TITLE: RF CAVITY ASSEMBLY

CERAMASEAL
DIV. OF LUCAS DEVICES INC. DIV. OF U.S.A.

ALL DIMENSIONS IN INCHES EXCEPT AS NOTED

| FRACTIONS | 2 PLACE DEC | 3 PLACE DEC | ANGLES |
|---|---|---|---|
| ± | ± .03 | ± .015 | ± 2° |

SUPERSEDES 33191 SCALE TO
DRAWN BY SCALE 1 1/2 : 1 SALES DRAWING NO. REV.
CHECKED DATE 04/14/93 13837
REF 33319 PLOT 2143