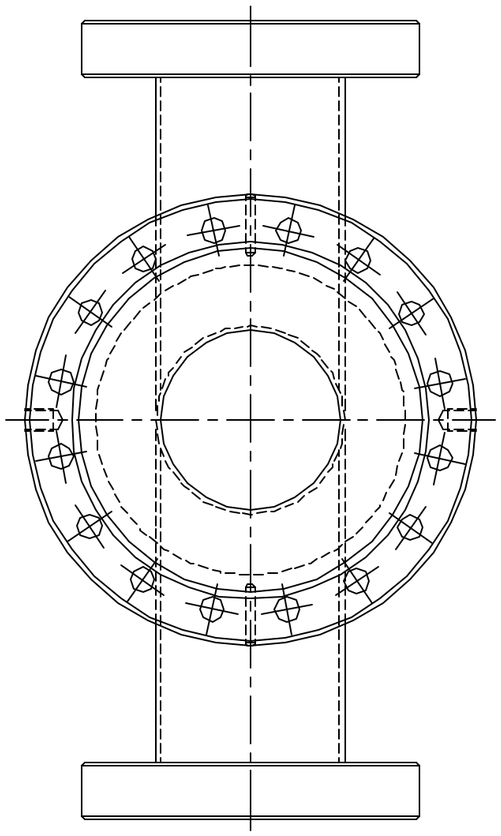

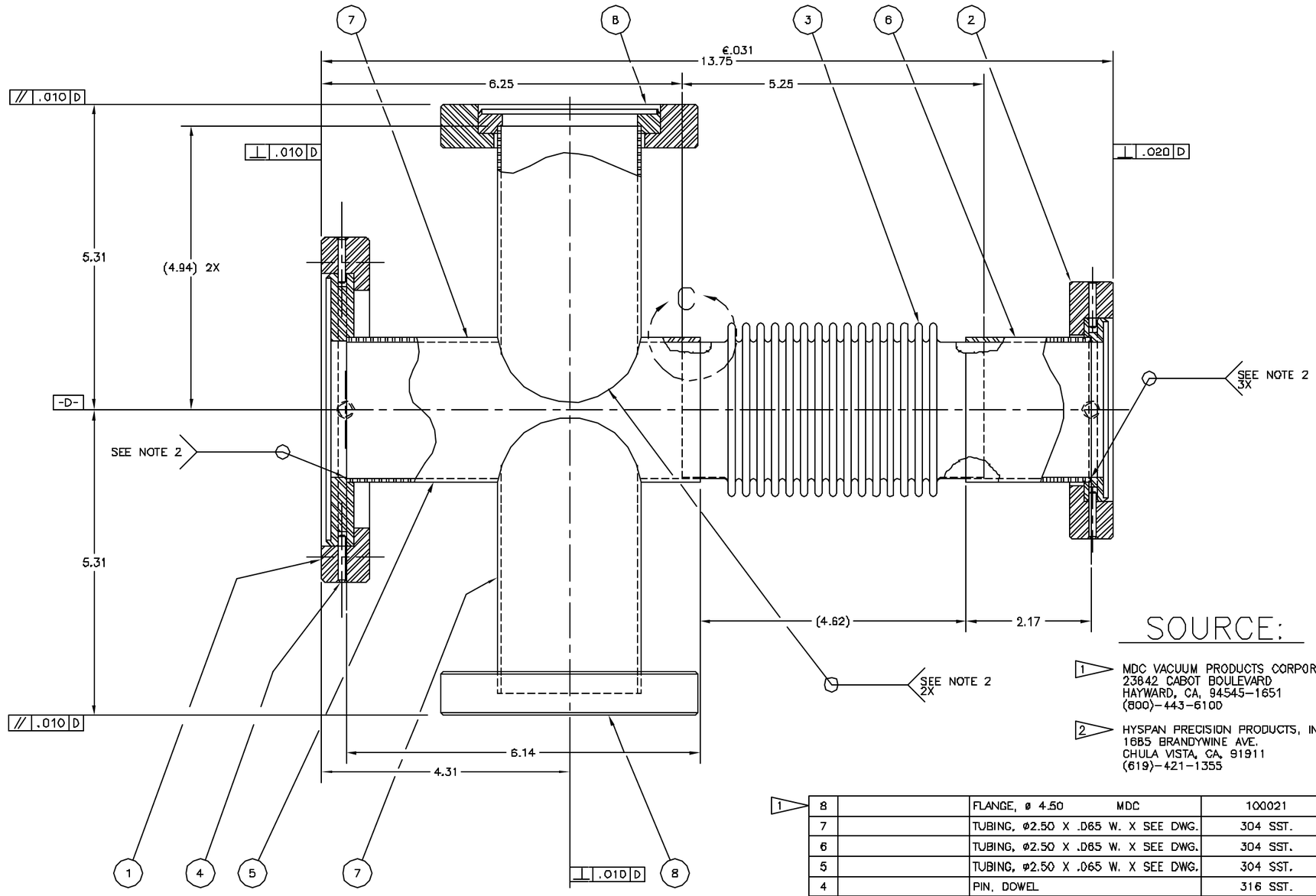

SOURCE:

1. MDC VACUUM PRODUCTS CORPORATION
23842 CABOT BOULEVARD
HAYWARD, CA, 94545-1651
(800)-443-6100

2. HYSPAN PRECISION PRODUCTS, INC.
1685 BRANDYWINE AVE.
CHULA VISTA, CA, 91911
(619)-421-1355

NOTES:

1. WELD PREP IN ACCORDANCE WITH MATERIAL THICKNESS.
2. ALL WELDS MUST BE VACUUM TIGHT. NO LEAK SHALL BE DETECTABLE ON THE MOST SENSITIVE SCALE OF A HELIUM LEAK DETECTOR, WITH A MIN. SENSITIVITY OF 10^{-10} ATM CC/SEC OR BETTER.
3. ALL WELDS INTERNAL OR FULL PENETRATION USING THE INERT-GAS TUNGSTEN-ARC WELDING PROCESS.
4. CHEMICAL CLEAN FINISHED PRODUCT:
   a. ALKALINE CLEAN
   b. ELECTROPOLISH (INSURE PROTECTION OF KNIFE EDGES)
   c. RINSE IN DE-IONIZED WATER.
5. PROTECT FLANGES WITH CONFLAT COVERS OR APPROVED ALTERNATE METHODS.
6. ALL WELDS TO BE PERFORMED IN CLEAN ROOM CONDITIONS.
7. AT ASSEMBLY, PRESS FIT ITEM 4 INTO ITEMS 1 AND 2 FLUSH WITH THE OUTSIDE DIAMETER OF ITEMS 1 AND 2 MAKING SURE THAT ITEMS 1 AND 2 CAN ROTATE FREELY.
8. USE SPECIFIED PURCHASE PART OR APPROVED EQUIVALENT.

BELLOWS SPECIFICATION

1. FREE LENGTH = 13.75
2. EXPANDED LENGTH = 14.50
3. COMPRESSED LENGTH = 13.00
4. CONVOLUTIONS OF 316L STAINLESS STEEL , THICKNESS .012 (MIN)
5. CONVOLUTIONS I.D. 2.375 (MIN)
6. CONVOLUTIONS O.D. 3.25 MAX.
7. 4 CONVOLUTIONS / INCH, 15 CONVOLUTIONS TOTAL
8. EXTERNAL PRESSURE = 14.7 PSI
9. TEMPERATURE 0°C TO 200°C
10. NUMBER OF CYCLES =2000
11. AXIAL SPRING CONSTANT =500 LB/IN (MAX)

SYM	CHANGE DESCRIPTION	BY	CHKD	DATE

REVISIONS

	ITEM	DWG. & ELECTRONIC FILE No.	NOMENCLATURE OR DESCRIPTION		MATERIAL / SPEC	QTY
1	8		FLANGE, ø 4.50	MDC	100021	2
	7		TUBING, ø2.50 X .065 W. X SEE DWG.		304 SST.	2
	6		TUBING, ø2.50 X .065 W. X SEE DWG.		304 SST.	1
	5		TUBING, ø2.50 X .065 W. X SEE DWG.		304 SST.	1
	4		PIN, DOWEL		316 SST.	8
2	3		BELLOWS, SEE DWG.	HYSPAN	7531K	1
1	2		FLANGE, ø 4.50	MDC	100021	1
1	1		FLANGE, ø 6.00	MDC	100025	1

PARTS LIST

UNLESS OTHERWISE SPECIFIED: ALL DIMENSIONS ARE IN INCHES
TOLERANCES
DECIMALS: X ±.015, XX ±.010, XXX ±.005
ANGULAR: ±.25°
SURFACE ROUGHNESS 250√
REMOVE ALL BURRS AND BREAK SHARP EDGES .03 MAX.
SURFACE TEXTURE TO BE IN ACCORDANCE WITH LATEST ANSI B46.1
DIMENSIONS & TOLERANCES IN ACCORDANCE WITH LATEST ANSI Y14.5
DO NOT SCALE DRAWING

ELECTRONIC FILE NUMBER: A06893

THIS DRAWING IS THE PROPERTY OF
ARGONNE NATIONAL LABORATORY

		DATE
DRAWN BY	B.BABCOCK	9/92
CHECKED BY		DATE
RESPONSIBLE ENGINEER		DATE
GP LEADER		DATE
PROJECT MGR		DATE
APPROVED/RELEASED		DATE

TITLE
ADVANCED PHOTON SOURCE
SYNCHROTRON
RF SECTION
BEAMLINE CROSS

MATERIAL: SEE B.O.M.
SCALE: 1=1
SHEET 1 of 2
SIZE: D
DRAWING NUMBER: 220401-00060-00