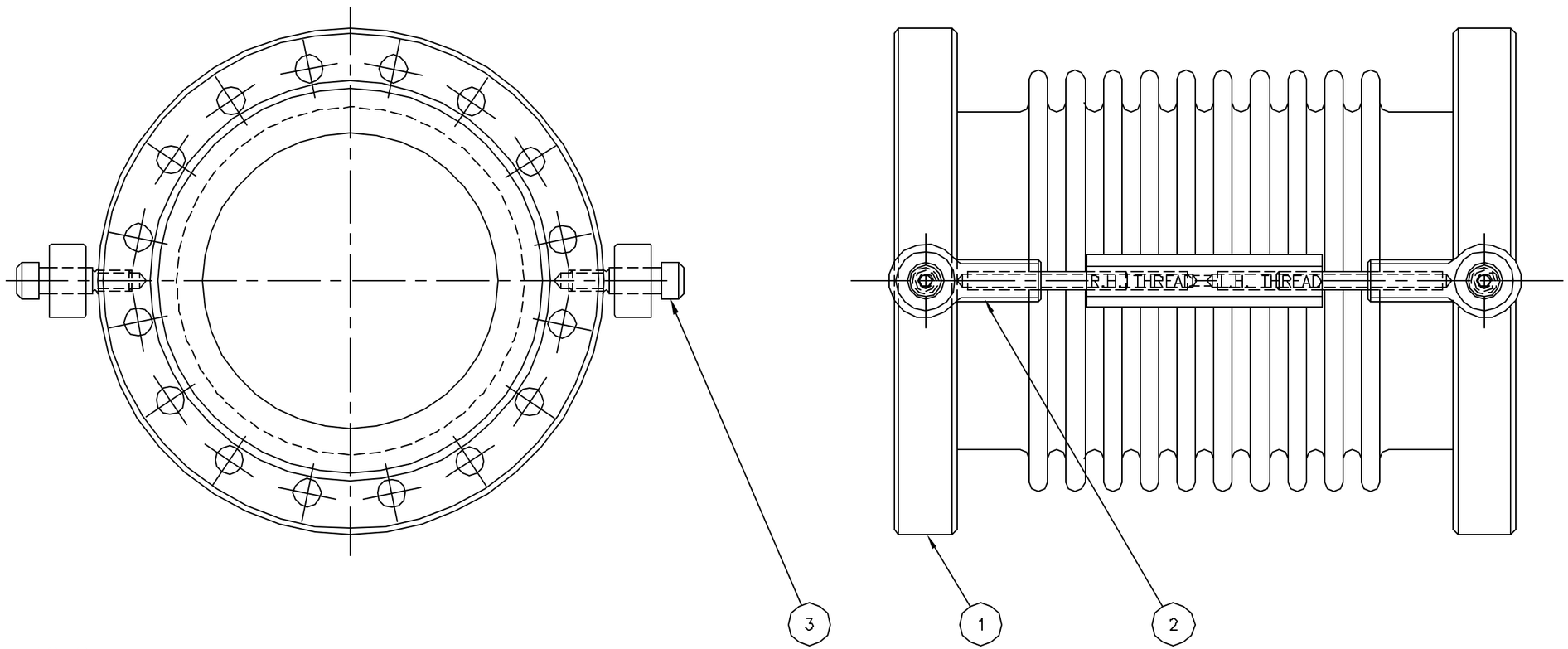

NOTES:
1. USE SPECIFIED PURCHASE PART OR APPROVED EQUIVALENT

ITEM	DWG. & ELECTRONIC FILE No.	NOMENCLATURE OR DESCRIPTION	MATERIAL / SPEC	QTY
3		SCREW, SHOULDER .250-20UNC-3A	91259A580	4
2	220401-00063-00	LOCKDOWN, BEAMLINE	SEE DWG.	2
1	220401-00065-00	BELLOWS, BEAMLINE	SEE DWG.	1

PARTS LIST

SOURCE

1 MCMASTER CARR SUPPLY COMPANY
P.O. BOX 4355,
CHICAGO, IL, 60680-4355
(312)-833-0300

SYM	CHANGE DESCRIPTION	BY	CHKD	DATE

REVISIONS

UNLESS OTHERWISE SPECIFIED: ALL DIMENSIONS ARE IN INCHES
TOLERANCES
DECIMALS: .X ±.013; .XX ±.010; .XXX ±.005
ANGULAR: ±.25°
SURFACE ROUGHNESS 250
REMOVE ALL BURRS AND BREAK SHARP EDGES .03 MAX.
SURFACE TEXTURE TO BE IN ACCORDANCE WITH LATEST ANSI B46.1
DIMENSIONING & TOLERANCING IN ACCORDANCE WITH LATEST ANSI Y14.5
DO NOT SCALE DRAWING

ELECTRONIC FILE NUMBER: A06897

THIS DRAWING IS THE PROPERTY OF
ARGONNE NATIONAL LABORATORY

DRAWN BY B.BABCOCK	DATE 8/92	GP LEADER	DATE
CHECKED BY	DATE	PROJECT MGR	DATE
RESPONSIBLE ENGINEER	DATE	APPROVED/RELEASED	DATE

TITLE
ADVANCED PHOTON SOURCE
SYCHROTRON
RF SECTION
BEAMLINE BELLOWS ASSY

MATERIAL: SEE B.O.M.
SCALE 1=1
SHEET 1 OF 1
SIZE C
DRAWING NUMBER 22040201-00064-00