If a magnet fails to pass the Go-Nogo gauge test, repeat the test. If it fails again then immediately page H.Friedsam (4-1864) and G. Goeppner (4-5654). Their backups are M.Penicka (4-1863) and R.Bechtold (4-2906), respectively.

The completed test data sheet is to be hand delivered (not left in the mailbox) to H. Friedsam or his backup and R. Bechtold so it can be posted on the web as soon as possible.

Vacuum Chamber Clearances

	Sector	Girder 1	Girder 2	Girder 3	Girder 4	Girder 5
F	1	✓	✓	✓	✓	✓
A	2	✓	✓	✓	✓	✓
	3	✓	✓	✓	✓	✓
	4	✓	✓	✓	✓	✓
	5	✓	✓	✓	✓	✓
	6	✓	✓	✓	✓	✓
	7	✓	✓	✓	✓	✓
	8	✓	✓	✓	✓	✓
	9	✓	✓	✓	✓	✓
B	10	✓	✓	✓	✓	✓
	11	✓	✓	✓	✓	✓
	12	✓	✓	✓	✓	✓
	13	✓	✓	✓	✓	✓
	14	✓	✓	✓	✓	✓
	15	✓	✓	✓	✓	✓
	16	✓	✓	✓	✓	✓
	17	✓	✓	✓	✓	✓
C	18	✓	✓	✓	✓	✓
	19	✓	✓	✓	✓	✓
	20	✓	✓	✓	✓	✓
	21	✓	✓	✓	✓	✓
	22	✓	✓	✓	✓	✓
	23	✓	✓	✓	✓	✓
D	24	✓	✓	✓	✓	✓
	25	✓	✓	✓	✓	✓
	26	✓	✓	✓	✓	✓
	27	✓	✓	✓	✓	✓
	28	✓	✓	✓	✓	✓
	29	✓	✓	✓	✓	✓
E	30	✓	✓	✓	✓	✓
	31	✓	✓	✓	✓	✓
	32	✓	✓	✓	✓	✓
	33	✓	✓	✓	✓	✓
	34	✓	✓	✓	✓	✓
	35	✓	✓	✓	✓	✓
F	36	✓	✓	✓	✓	✓
	37	✓	✓	✓	✓	✓
	38	✓	✓	✓	✓	✓
	39	✓	✓	✓	✓	✓
	40	✓	✓	✓	✓	✓

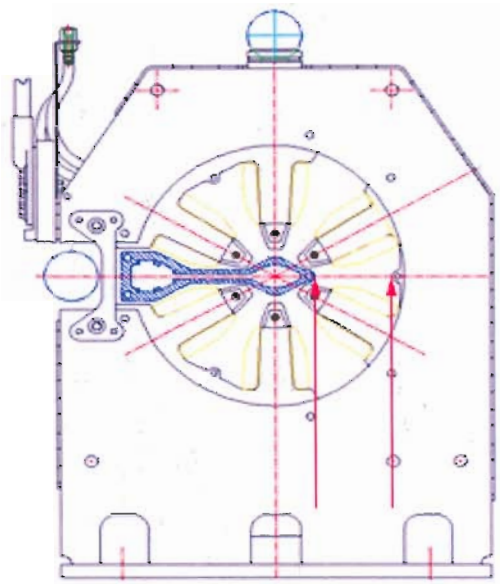

Sext.Gauge size:(Go) **4.979"** (Nogo) **5.147"**

Girder-2	Girder-4
AS2-AS3	BS3-BS2

The gage is to be inserted at the location marked by the red arrows

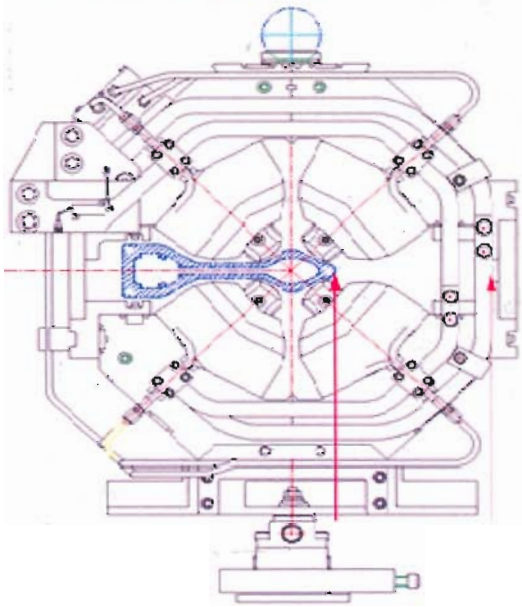

Quad.Gauge size:(Go) **9.624"**(Nogo) **9.792"**

Girder-1	Girder-3	Girder-5
AQ1-AQ3	AQ4-BQ4	BQ3-BQ1

Name: [illegible] Date: 1/16/07

If a magnet fails to pass the Go-Nogo gauge test, repeat the test. If it fails again then immediately page H.Friedsam (4-1864) and G. Goeppner (4-5654). Their backups are M.Penicka (4-1863) and R.Bechtold (4-2906), respectively.

The completed test data sheet is to be hand delivered (not left in the mailbox) to H. Friedsam or his backup and R. Bechtold so it can be posted on the web as soon as possible.

Vacuum Chamber Clearances

	Sector	Girder 1	Girder 2	Girder 3	Girder 4	Girder 5
F	1	X	X	X	X	X
A	2	X	X	X	X	X
	3	X	X	X	X	X
	4	X	X	X	X	X
	5	X	X	X	X	X
	6	X	X	X	X	X
	7	X	X	X	X	X
	8	X	X	X	X	X
	9	X	X	X	X	X
B	10	X	X	X	X	X
	11	X	X	X	X	X
	12	X	X	X	X	X
	13	X	X	X	X	X
	14	X	X	X	X	X
	15	X	X	X	X	X
	16	X	X	X	X	X
	17	X	X	X	X	X
C	18	X	X	X	X	X
	19	X	X	X	X	X
	20	X	X	X	X	X
	21	X	X	X	X	X
	22	X	X	X	X	X
	23	X	X	X	X	X
D	24	X	X	X	X	X
	25	X	X	X	X	X
	26	X	X	X	X	X
	27	X	X	X	X	X
	28	X	X	X	X	X
	29	X	X	X	X	X
E	30	X	X	X	X	X
	31	X	X	X	X	X
	32	X	X	X	X	X
	33	X	X	X	X	X
	34	X	X	X	X	X
	35	X	X	X	X	X
F	36	X	X	X	X	X
	37	X	X	X	X	X
	38	X	X	X	X	X
	39	X	X	X	X	X
	40	X	X	X	X	X

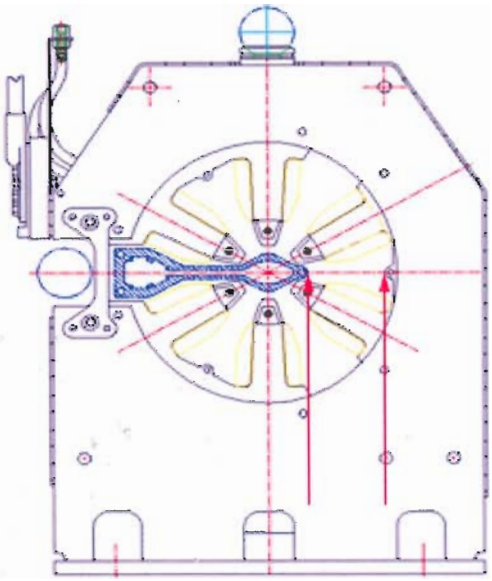

Sext.Gauge size:(Go) **4.979"** (Nogo) **5.147"**

Girder-2	Girder-4
AS2-AS3	BS3-BS2

The gage is to be inserted at the location marked by the red arrows

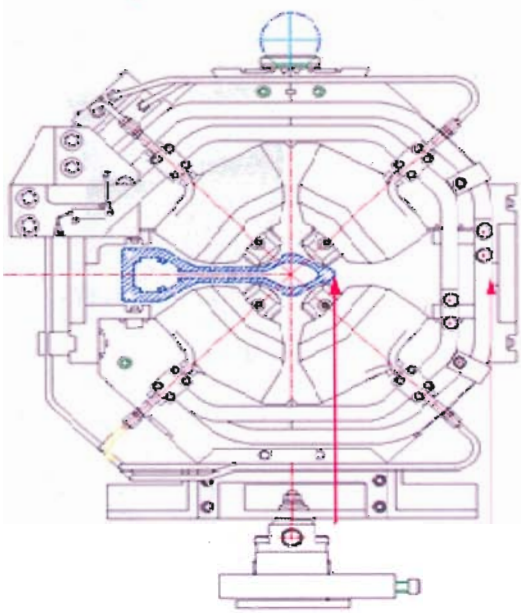

Quad.Gauge size:(Go) **9.624"**(Nogo) **9.792"**

Girder-1	Girder-3	Girder-5
AQ1-AQ3	AQ4-BQ4	BQ3-BQ1

Name: Cheryl Berghold Date: 1-16-07